JT8D
TROUBLESHOOTING TRAINING HANDBOOK

SERVICE SCHOOL

MAY 15, 1974

Pratt & Whitney Aircraft DIVISION OF UNITED AIRCRAFT CORPORATION

EAST HARTFORD, CONNECTICUT

INTRODUCTION

THIS PUBLICATION WAS COMPILED AND ISSUED BY THE SERVICE SCHOOL, PRATT & WHITNEY AIRCRAFT, DIVISION OF UNITED AIRCRAFT, EAST HARTFORD, CONNECTICUT, U.S.A.

THE MATERIAL CONTAINED IN THIS PUBLICATION IS FOR TRAINING PURPOSES ONLY AND IS IN NO WAY TO BE CONSIDERED AS REPLACING OR SUPERSEDING APPLICABLE MANUALS.

A PORTION OF THE ARTWORK CONTAINED IN THIS HANDBOOK IS FURNISHED THROUGH THE COURTESY OF THE BOEING COMPANY AND DOUGLAS AIRCRAFT CORPORATION.

TABLE OF CONTENTS

Section			Page No.
I.	Lubrication System		
	1-1	General	1-1
	1-2	Pressure System	1-1
	1-3	Scavenge System	1-3
	1-4	Breather System	1-4
	1-5	Fault Isolation Tables	1-5
	1-6	Breather Pressure Check	1-34
II.	Bleed System		
	2-1	General	2-1
	2-2	Sense Pressures	2-1
	2-3	Operation	2-1
	2-4	Bleed Schedule Check Procedure	2-4
	2-5	Fault Isolation Procedure	2-5
III.	Indicating Systems		
	3-1	Engine Pressure Ratio System	3-1
	3-2	Engine Pressure Ratio Fault Isolation Table	3-3
	3-3	Engine Tachometer System	3-7
	3-4	Engine Tachometer System Fault Isolation Table	3-9
	3-5	Exhaust Gas Temperature System	3-12
	3-6	System Check Procedures	3-12
	3-7	Exhaust Gas Temperature System Fault Isolation Table	3-16
IV.	Fuel System		
	4-1	General	4-1
	4-2	Engine Fuel Distribution System	4-1
	4-3	Engine Fuel Control System	4-4
	4-4	P_{s4} Signal System	4-4
	4-5	Low Frequency Vibration (Rumble)	4-8
	4-6	Fault Isolation Table	4-10

TABLE OF CONTENTS (Continued)

Section			Page No.
V.	Ignition System		
	5-1	General	5-1
	5-2	Simmonds Precision System Discription & Operation	5-1
	5-3	Simmonds Precision System Specification	5-1
	5-4	Bendix E.C.D. System Description & Operation	5-4
	5-5	Bendix E.C.D. System Specifications	5-7
	5-6	High Tension Distribution - Description & Operation	5-7
	5-7	System Fault Isolation Table	5-9
VI.	Fuel Control Trimming		
	6-1	General	6-1
	6-2	Effect of Operating Hours on Trim	6-2
	6-3	Trim Adjustments	6-2
	6-4	Purpose of Part Power Trim Stop	6-2
	6-5	Trim Data Recording	6-7
	6-6	Factors Affecting Trim	6-7
	6-7	Boeing 727 Trimming Example	6-10
	6-8	Douglas DC9 Trimming Example	6-18
VII.	Data Plate Speed Check		
	7-1	General	7-1
	7-2	Effects of Excessive Deterioration	7-1
	7-3	Parameter Duplication	7-1
	7-4	Data Plate Speed Check	7-1
	7-5	Data Plate Speed Check Utilization	7-2
	7-6	Analyzing Gaspath Deterioration	7-2
	7-7	Data Plate Check (Detailed Example)	7-6

TABLE OF CONTENTS (Continued)

Section			Page No.
VIII.	Ground Performance Monitoring		
	8-1	General	8-1
	8-2	Parameter Categories	8-1
	8-3	Establishing Performance Baseline Curves	8-1
	8-4	Performance Data Correction	8-2
	8-5	Performance Data Collection	8-3
	8-6	Sample Calculation	8-4
	8-7	Plotting	8-12
	8-8	Determining Type of Deterioration	8-15
	8-9	Example Problem	8-15
	8-10	Explanation of Additional Influences	8-20
	8-11	High E.G.T.	8-20
	8-12	Off-Idle Stalls	8-20
	8-13	Slow Acceleration	8-21
	8-14	High Power Stall	8-21

LIST OF ILLUSTRATIONS

Figure No.	Title	Page No.
1-1	Oil System	1-2
1-2	Engine View (Left Lower Front)	1-6
1-3	Engine View (Bottom)	1-7
1-4	Main Oil Pump Housing	1-8
1-5	Oil Pressure Pump Cavity Location	1-9
1-6	Engine View (Bottom Rear)	1-11
1-7	Main Oil Pressure Regulating Valve	1-12
1-8	Oil Pressure Regulating Valve	1-13
1-9	Engine View (Left Side)	1-17
1-10	Engine View (Right Side)	1-20
1-11	Fuel/Oil Cooler	1-21
1-12	Inspection Openings (Left Side)	1-22
1-13	Engine View (Right Lower Front)	1-23
1-14	Chip Detector Location	1-24
1-15	Accessory Component Gearbox	1-26
1-16	Engine View (Front)	1-29
1-17	Front Accessory Cover	1-30
1-18	"O" Ring Seals Location	1-31
1-19	Number One Bearing Housing	1-32
1-20	Local Manufactur Oil Tank Cap	1-36
1-21	Accessory Component Gearbox (Left Side)	1-37
2-1	Engine Pressure Ratio System Schematic	2-2
2-2	Simplified Bleed System Schematic	2-3
2-3	Pressure Ratio Bleed Control	2-7
2-4	P_{s3} Signal Pressure Source	2-8
3-1	Engine Pressure Ratio System Schematic	3-1
3-2	EGT and Pt7 Probe Locations	3-6
3-3	Tachometer Indicating System Schematic	3-8
3-4	N_1 Tachometer Drive Gear	3-11
3-5	EGT System Schematic	3-13
3-6	Thermocouple Connectors	3-14
3-7	EGT Airframe Interface Connection	3-17
3-8	EGT Probe Evaluation Adapter	3-19
3-9	Junction Box Averaging Connection	3-21
3-10	Cannon Plug Averaging Connection	3-22

LIST OF ILLUSTRATIONS (Continued)

Figure No.	Title	Page No.
4-1	Fuel System Schematic	4-2
4-2	Fuel Pump	4-3
4-3	Fuel Pressurizing and Dump Valve	4-5
4-4	Fuel Control	4-6
4-4A	Fuel Control	4-7
5-1	Simmonds Precision Exciter Box	5-2
5-2	Simmonds Precision Exciter Box Schematic	5-3
5-3	Bendix ECD Exciter Box	5-5
5-4	Bendix ECD Solid State Ignition Schematic	5-6
5-5	Ignition Exciter Spark Rate & Input Current Test	5-14
5-6	Ignition Exciter Output Voltage Test	5-15
6-1	Power Trim Stop	6-3
6-2	727 Trim Target Selection	6-5
6-3	DC9 Trim Target Selection	6-6
6-4	Work Sheet	6-8
6-5	Wind Direction & Velocity Limits	6-9
6-6	Boeing 727 Trim Table	6-11
6-7	P_{t7} Test Fitting Locations (727)	6-13
6-8	Precision Tachometer	6-14
6-9	CompAir Portable Trim Kit	6-15
6-10	Compressor Bleed Valve Schedule	6-16
6-11	Douglas DC9 Trim Table	6-19
6-12	Test Fittings (DC9)	6-21
6-13	Compressor Bleed Valve Schedule	6-22
7-1	Boeing 727 Trim Table	7-3
7-2	Douglas DC9 Trim Table	7-4
7-3	Engine Section Definition	7-5

LIST OF ILLUSTRATIONS (Continued)

Figure No.	Title	Page No.
8-1	Establishing Baseline Performance Curves	8-2
8-2	JT8D Fuel Flow Correction Factor	8-7
8-3A	JT8D-7 Performance Curves	8-13
8-3B	JT8D-7 Performance Curves	8-14
8-4A	JT8D-9 Performance Curves	8-18
8-4B	JT8D-9 Performance Curves	8-19
8-5A	JT8D-7 Performance Curves	8-24
8-5B	JT8D-7 Performance Curves	8-25
8-6A	JT8D-9 Performance Curves	8-26
8-6B	JT8D-9 Performance Curves	8-27
8-7A	JT8D-15 Performance Curves	8-28
8-7B	JT8D-15 Performance Curves	8-29

LIST OF TABLES

Table	Title	Page No.
1-1	Airframe Breather Back Pressure	1-34
5-1	Test Values for Intermittent Duty Circuit	5-16
5-2	Test Values for Continuous Duty Circuit	5-16
8-1	Relative Pressure	8-15
8-2	Relative Temperature	8-6
8-3	Conversion Chart ("Hg vs PSI)	8-9
8-4	Temperature Conversion Table	8-10
8-4A	Temperature Conversion Table	8-11
8-5	Parameter Shift Table	8-22
8-6	Parameter Shift Table	8-23

SECTION I

LUBRICATION SYSTEM

1-5. LUBRICATION SYSTEM FAULT ISOLATION TABLES

A. No Engine Oil Pressure Indication

	Possible Causes	Isolation Procedures	Corrective Action
1)	Low oil quantity	Check oil level	Add oil
2)	Defective indicator	*Interchange indicator connectors.	If problem persists replace indicator
3)	Defective transmitter	*Check wiring, circuit breaker, AC power to transmitter.	Replace or repair as required
4)	Defective main oil pump	**See (Figure 1-2). Disconnect line, pressure oil, before filter. Motor engine. If no oil is discharged, remove main oil pump. (See Figure 1-3 and 1-4). CAUTION: STAND CLEAR OF PUMP DISCHARGE PORT WHILE MOTORING.	Check main oil pressure pump for defective drive gear or pump failure. See Figure 1-4.
5)	Obstruction in oil supply from oil tank to pump inlet.	**Remove main oil pump	(See Figure 1-5). With oil tank removed, check for obstruction from oil pump inlet to oil tank.

*Refer to the Aircraft Maintenance Manual for wiring schematics and procedures.
**Drain oil tank before removing main oil pressure pump or regulating valve.

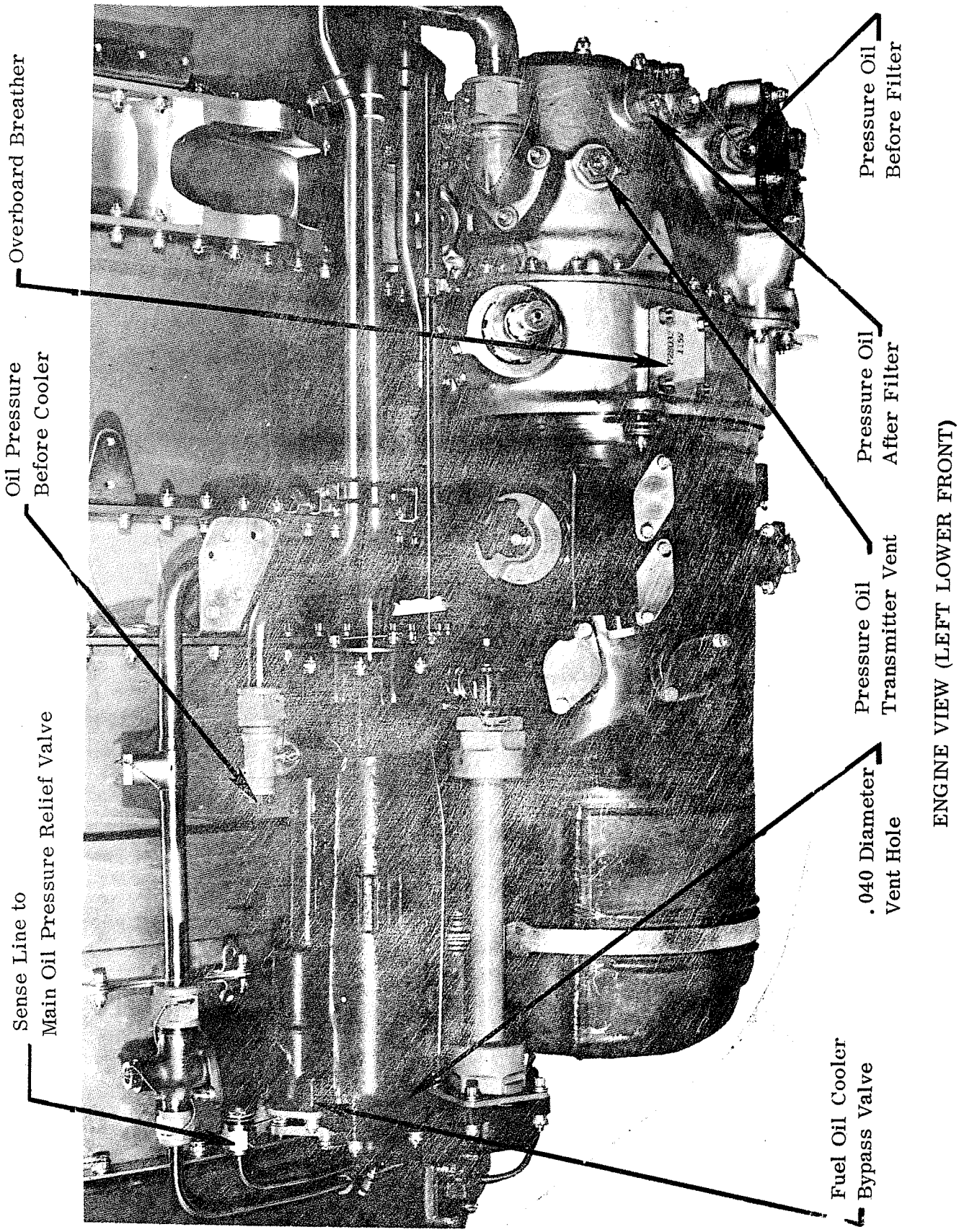

ENGINE VIEW (LEFT LOWER FRONT)

Figure 1-2

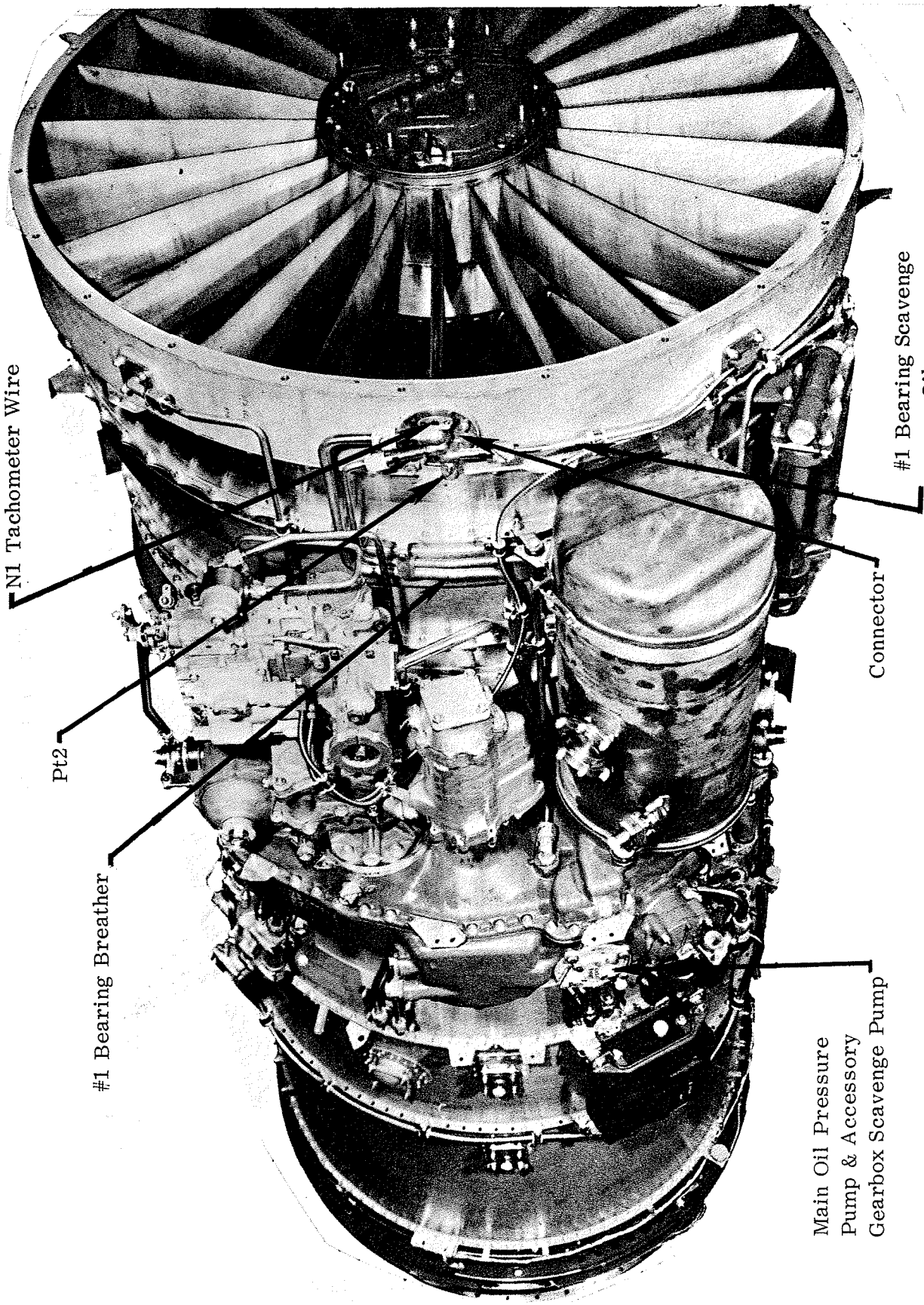

ENGINE VIEW (BOTTOM)

Figure 1-3

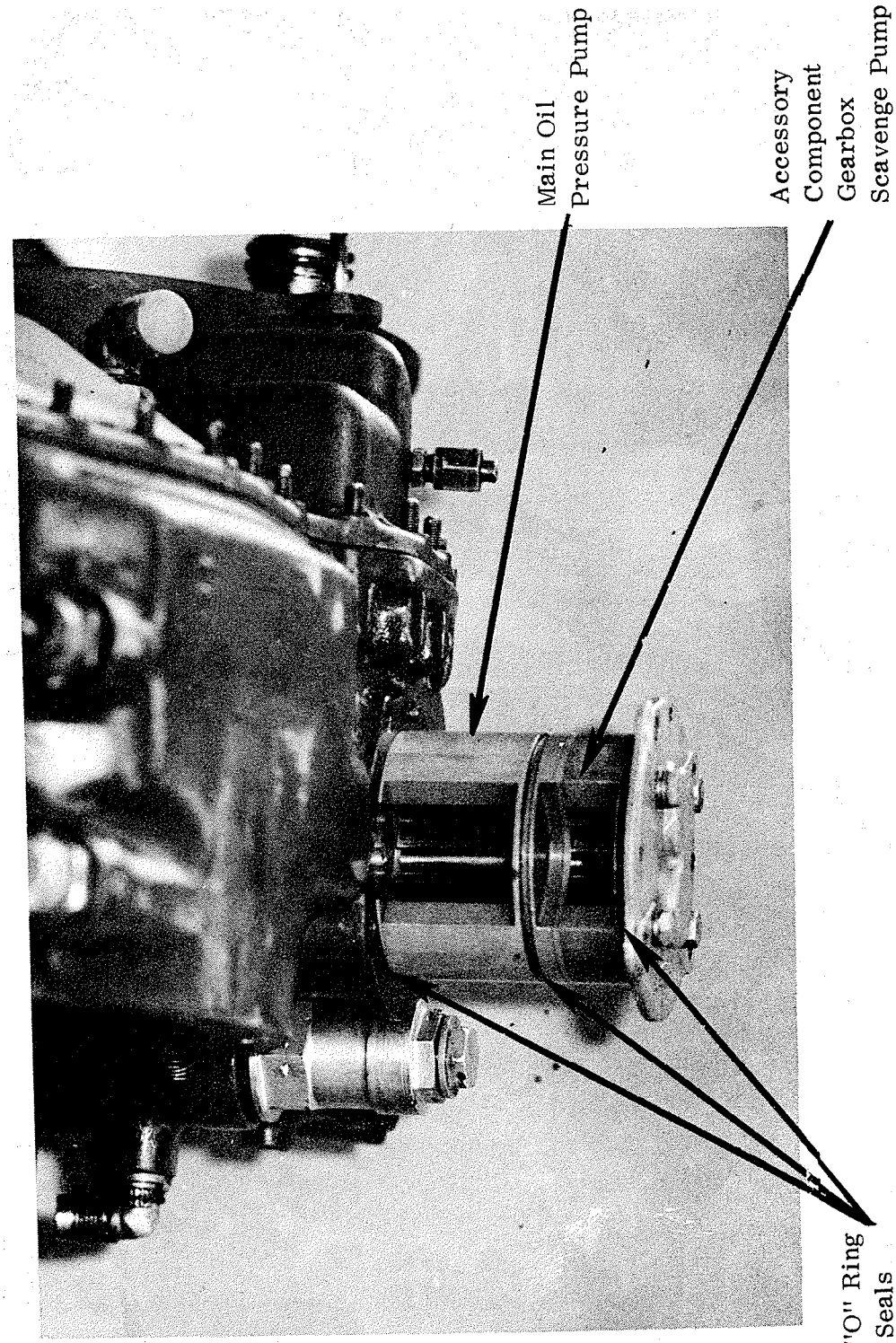

MAIN OIL PUMP HOUSING

Figure 1-4

OIL PRESSURE PUMP CAVITY LOCATION

Figure 1-5

B. Low Oil Pressure

	Possible Causes	Isolation Procedures	Corrective Action
1)	Low oil quantity	Check oil level	Add oil
2)	Defective indicator	Perform check in Para. 1-5-A2	Replace indicator
3)	Defective transmitter	Perform check in Para. 1-5-A3	Replace transmitter
4)	Defective oil pressure regulating valve	(See Figure 1-6). **Remove oil pressure regulating valve	(See Figure 1-7). Check packing C and D. Disassemble regulating valve and check for internal binding. (See Figure 1-8).
5)	Defective oil pressure pump	(See Figures 1-3 and 1-4). **Remove oil pressure pump	(See Figure 1-4 and 1-5). Check for defective packings on oil pump. Check for pump and cavity scoring.

C. High Oil Pressure

1)	Defective indicator	Perform check in Para. 1-5-A2	Replace indicator
2)	Defective transmitter	Perform check in Para. 1-5-A3	Replace transmitter

*Refer to Aircraft Maintenance Manual for procedures.
**Drain oil tank before removing main oil pressure pump or relief valve.

ENGINE VIEW (BOTTOM REAR)

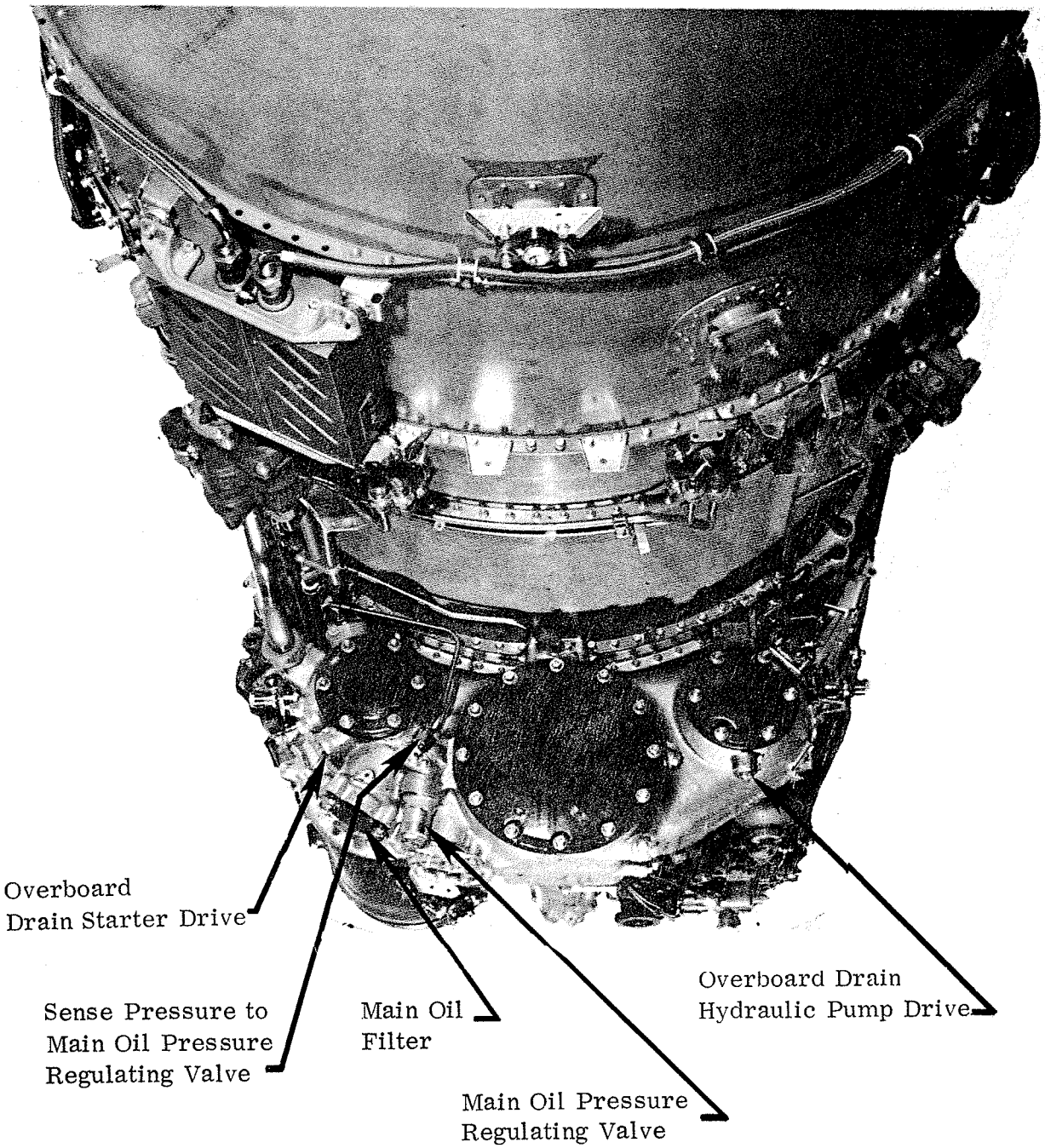

Figure 1-6

MAIN OIL PRESSURE REGULATING VALVE

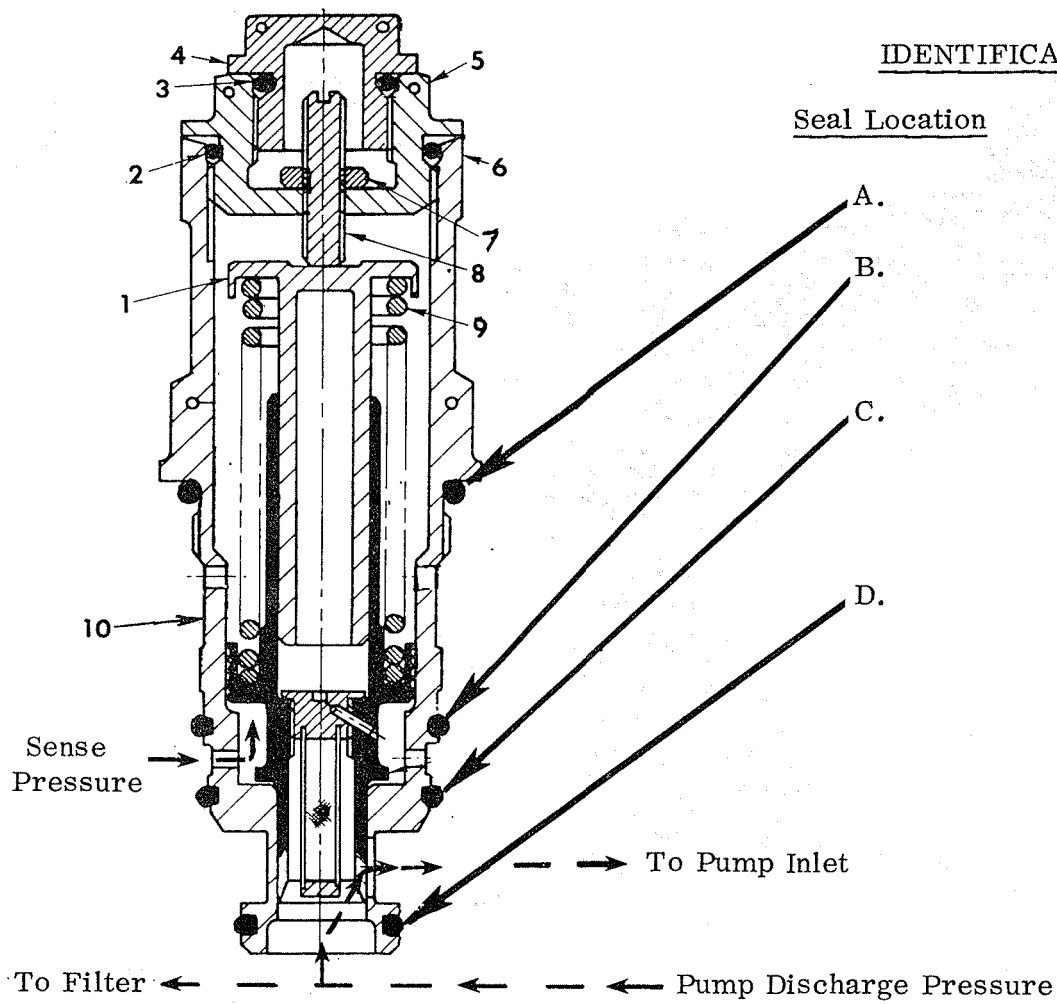

IDENTIFICATION OF SEAL FAILURE PROBLEMS

Seal Location	Malfunction
A.	Leak at gearbox.
B.	Sense line pressure leaks back into gearbox causing a high oil pressure indication.
C.	Pump by-pass pressure is higher than sense line pressure, thus leaking into the sense cavity causing a low oil pressure indication.
D.	With this seal missing or severely cut, pump discharge pressure will be leaking past this area and into the pressure relief valve return port. This condition will cause no change in oil pressure at cruise or take-off power. A low oil pressure indication will occur around idle and an even lower oil pressure indication will occur if the main oil pump gear housing is scored.

1. Helical Spring Retainer
2. Packing
3. Packing
4. Plug
5. Plug
6. Housing
7. Nut
8. Adjusting Screw
9. Spring
10. Oil Pressure Relief Valve Assembly

Figure 1-7

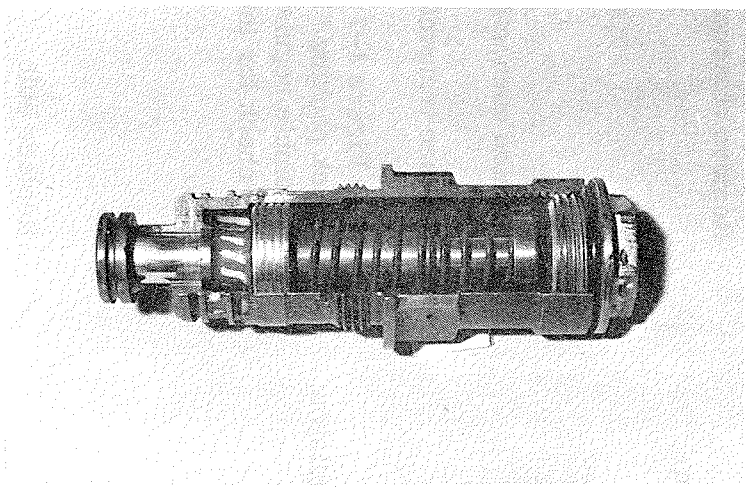

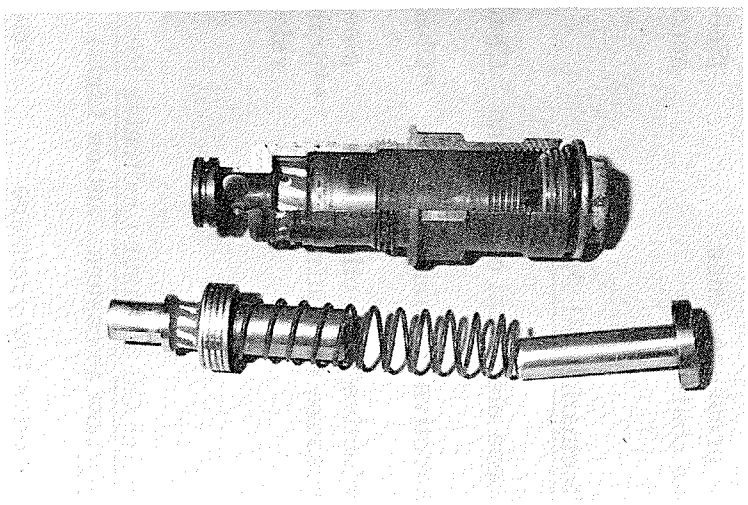

OIL PRESSURE RELIEF VALVE

Figure 1-8

	Possible Causes	Isolation Procedures	Corrective Action
3)	Defective oil pressure regulating valve	(See Figure 1-6) **Remove oil pressure regulating valve	(See Figure 1-7 and 1-8) Check packing "B". Disassemble regulating valve, and check for internal binding.
4)	Oil pressure sense line obstructed	(See Figure 1-6) Check sense line for obstruction	Remove obstruction
D.	Fluctuating Oil Pressure		
1)	Loose electrical connections	Check all connections	Tighten connections
2)	Defective transmitter	*Check transmitter	Replace transmitter
3)	Defective main oil pressure regulating valve	(See Figure 1-6) **Remove oil pressure regulating valve	(See Figure 1-7 and 1-8) Check packing "B". Disassemble regulating valve and check for internal binding.
E.	Engine Oil Pressure Indicator Reads Below 35 psig (NO Low Pressure Caution Light)		
1)	Defective low pressure indicating light	Press to test - *(Remove bulb)	Replace bulb

*Refer to Aircraft Maintenance Manual for procedures.
**Drain oil tank before removing main oil pressure pump or relief valve.

	Possible Causes	Isolation Procedures	Corrective Action
2)	Defective oil pressure indicator	*Perform check in Para. 1-5-A2	Replace indicator
3)	Defective oil pressure transmitter	*Perform check in Para. 1-5-A3	Replace transmitter

F. Oil Pressure Follows Throttle

1)	Regulating Valve binding	**(See Figure 1-6) Remove regulating valve	(See Figure 1-8). Disassemble regulating valve and check for binding.

G. Oil Filter Differential Pressure Light Will Not Extinguish

NOTE: If oil temperature is 25°C or below, the warning light may remain on after engine start, but should extinguish after the oil reaches 25°C. (15 or 40 micron filter).

1)	Main oil filter obstructed	(See Figure 1-6) Check filter	Change filter or clean per JT8D Maintenance Manual.
2)	Defective differential pressure switch	*Disconnect differential pressure switch electrical connector and check for continuity between connector pins. No continuity should be indicated.	Replace differential pressure switch.

*Refer to the Aircraft Maintenance Manual for procedures.
**Drain oil tank before removing main oil pressure pump or regulating valve.

H. Engine Oil Pressure Indicator Sluggish

	Possible Causes	Isolation Procedures	Corrective Action
1)	Check indicator	*Perform check in Para. 1-5-A2	Replace indicator
2)	Check transmitter	*Perform check in Para. 1-5-A3	Replace transmitter
3)	Main oil pressure line to transmitter obstructed	(See Figure 1-9) Check line for obstruction	Remove obstruction

I. Low Pressure Indicating Light Will Not Extinguish
(Pressure Verified to be normal)

1)	Defective low pressure switch	*	Replace low pressure switch
2)	Low pressure switch pressure line obstructed	Check for obstruction	Remove obstruction

J. No Engine Oil Temperature Indication

1)	Circuit breaker tripped		Reset circuit breaker
2)	Defective indicator	*Interchange indicator	If problem persists replace indicator.

*Refer to the Aircraft Maintenance Manual for procedures.

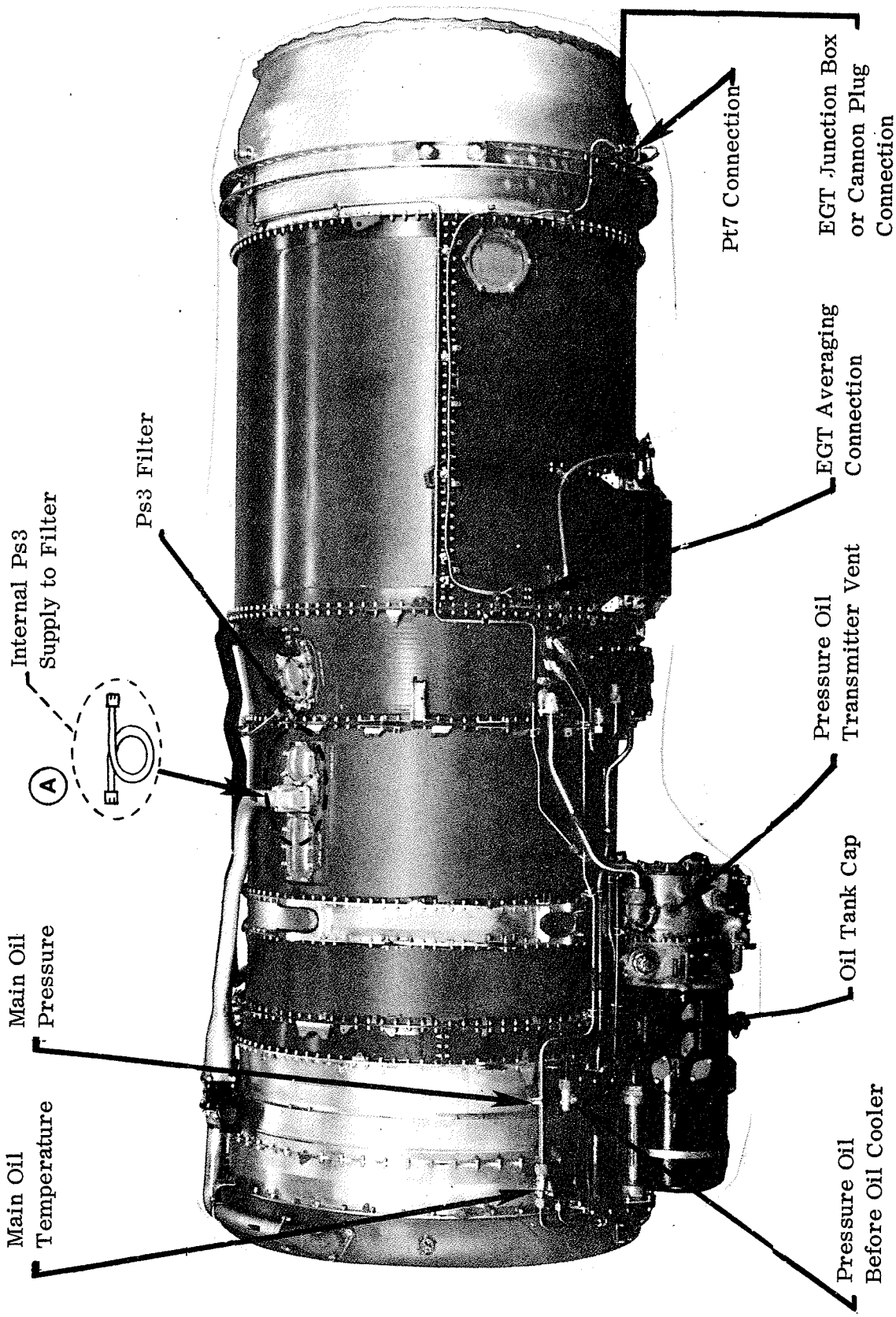

ENGINE VIEW (LEFT SIDE)

Figure 1-9

Possible Causes	Isolation Procedures	Corrective Action
3) Defective sensor	*Disconnect sensor and check sensor and associated wiring for continuity.	(See Figure 1-9) Replace sensor and/or wiring.
K. Engine Oil Temperature Fluctuates		
1) Loose electrical connections	Check all connections	Tighten connections
2) Defective indicator	*Perform check in Para. 1-5-A2	If problem persists, replace indicator.
L. Engine Oil Temperature Indicator Reads Low		
1) Defective indicator	*Perform check in Para. 1-5-K2	If problem persists, replace indicator.
M. Engine Oil Temperature Indicator Reads High		
1) Low oil quantity		Add oil
2) Defective indicator	*Perform check in Para. 1-5-K2	If problem persists, replace indicator.
3) Defective sensor	*Perform check in Para. 1-5-J3	(See Figure 1-9) Replace sensor

*Refer to Aircraft Maintenance Manual for procedures.
**Drain oil tank before removing main oil pressure pump or relief valve.

Possible Causes	Isolation Procedures	Corrective Action
4) Fuel de-icing valve defective (stuck open)	Start engine and advance power lever to 1.40 E.P.R. Select fuel de-ice. E.P.R. should drop approximately .2 to .3 and the oil temperature should increase. *Check power supply to source	(See Figure 1-10) Replace valve
5) Fuel/oil cooler by-pass valve open	(See Figures 1-2 and 1-11) Install pressure gauge (0-100 PSIG) to fitting indicated as oil before cooler. Start engine and monitor pressure. Compare pressure reading before cooler with cockpit oil pressure reading. If the difference between these two pressures is more then 30 psid, then the fuel/oil cooler is by-passing oil.	Remove cooler, and clean element. Check by-pass valve for proper operation. (Refer to the JT8D Accessories Component Overhaul Manual)
6) Bearing failure	(See Figures 1-6, 1-12, 1-13 and 1-14). Check main oil filter, and chip detectors, if applicable, for metal contamination.	Remove and replace engine.

*Refer to Aircraft Maintenance Manual for procedures.

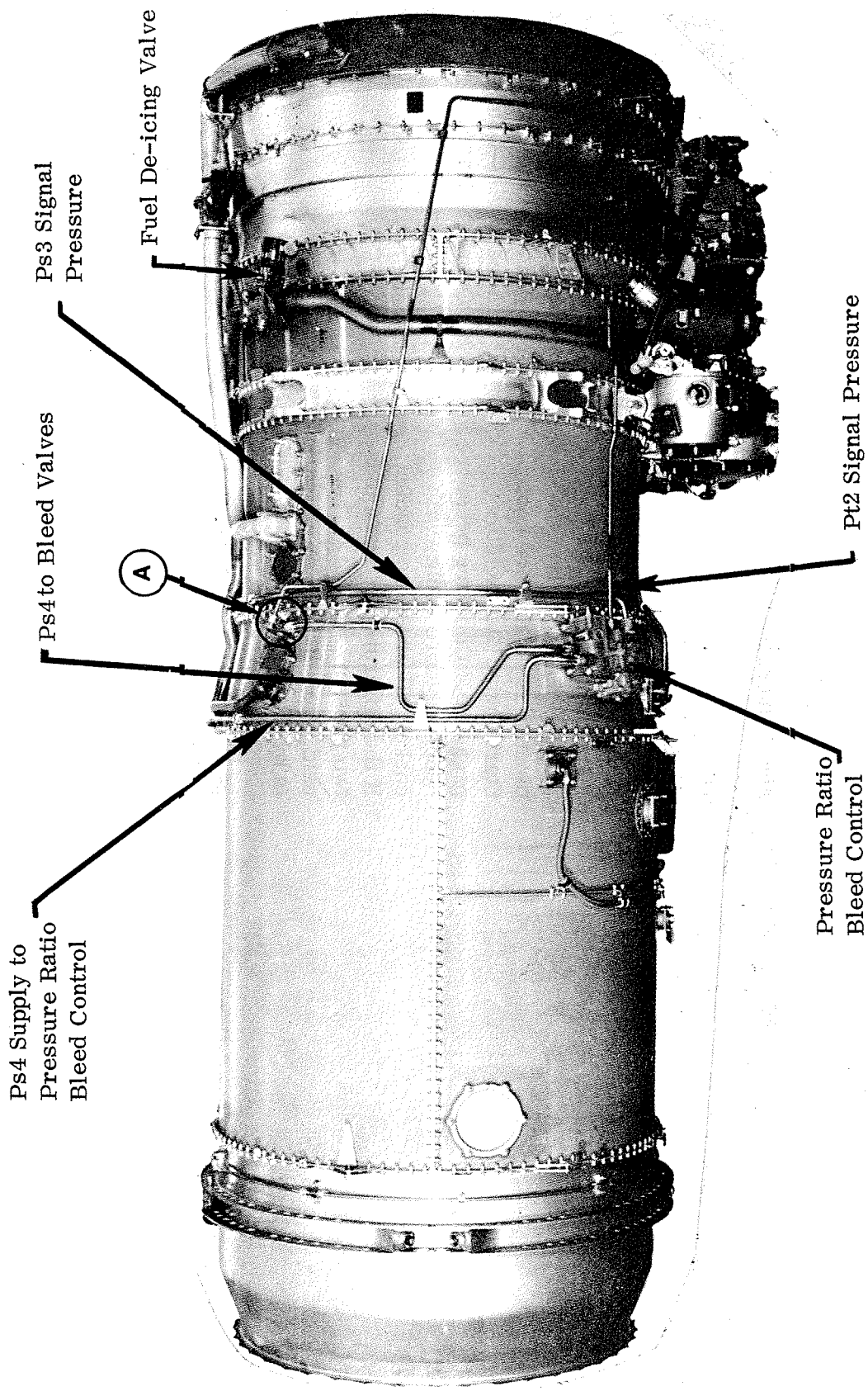

ENGINE VIEW (RIGHT SIDE)

Figure 1-10

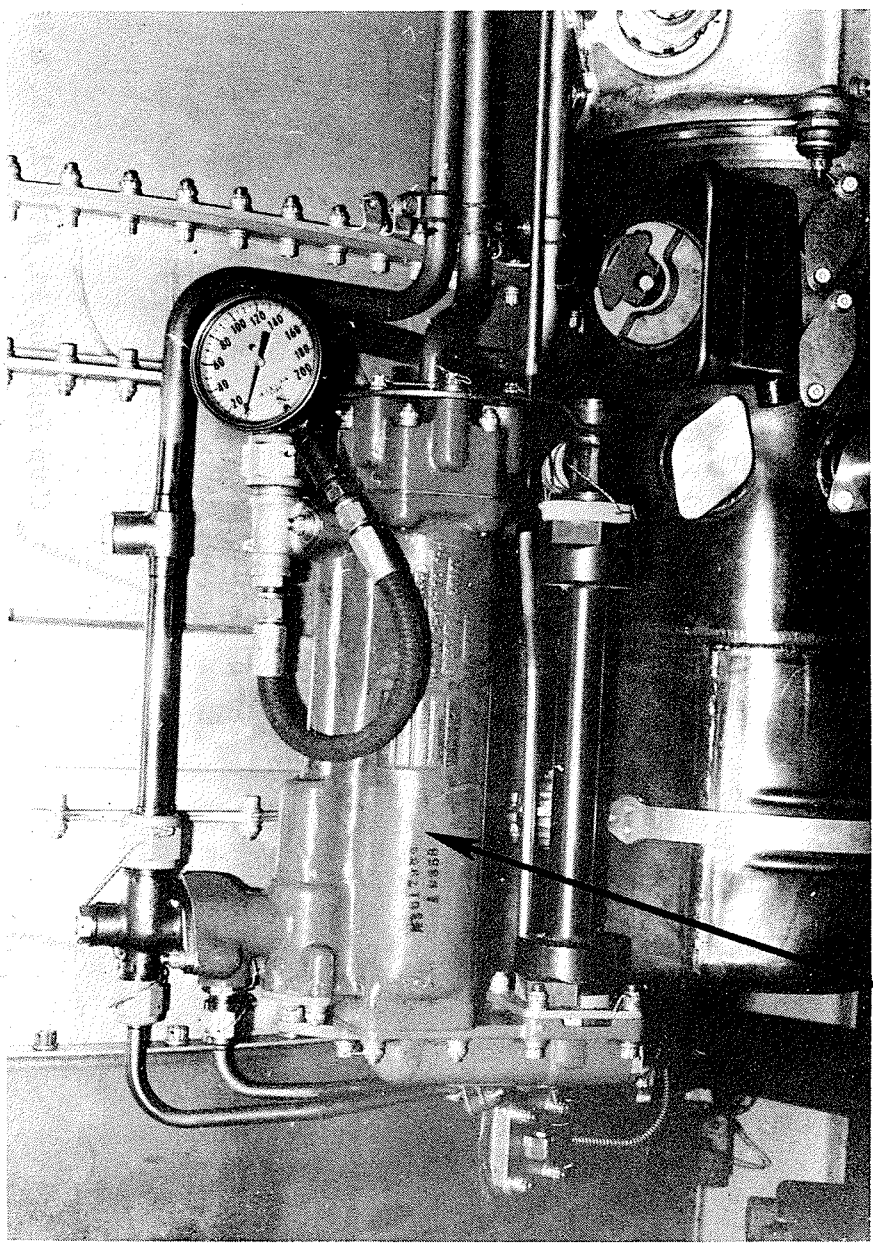

FUEL/OIL COOLER

Figure 1-11

INSPECTION OPENINGS - LEFT SIDE

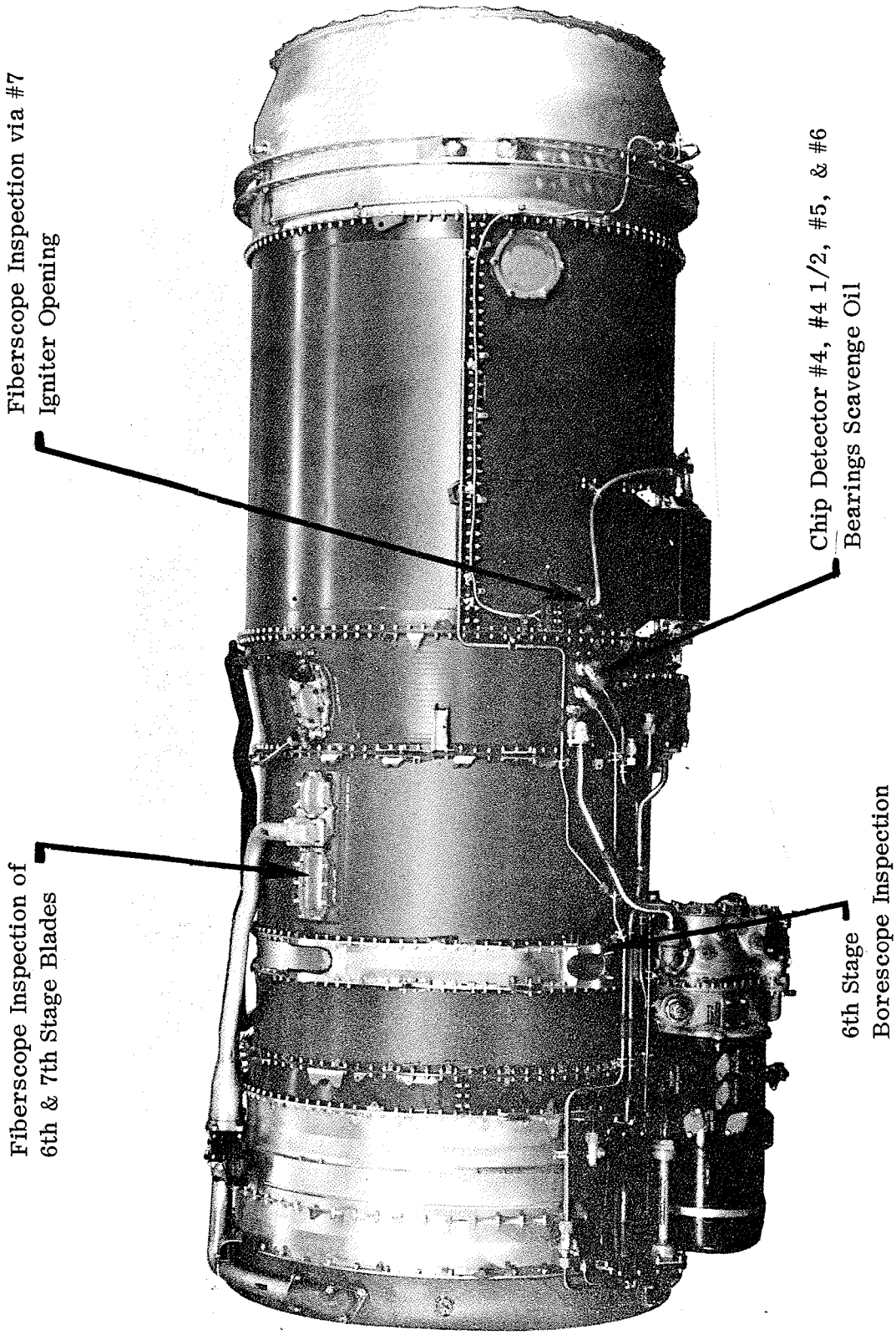

Figure 1-12

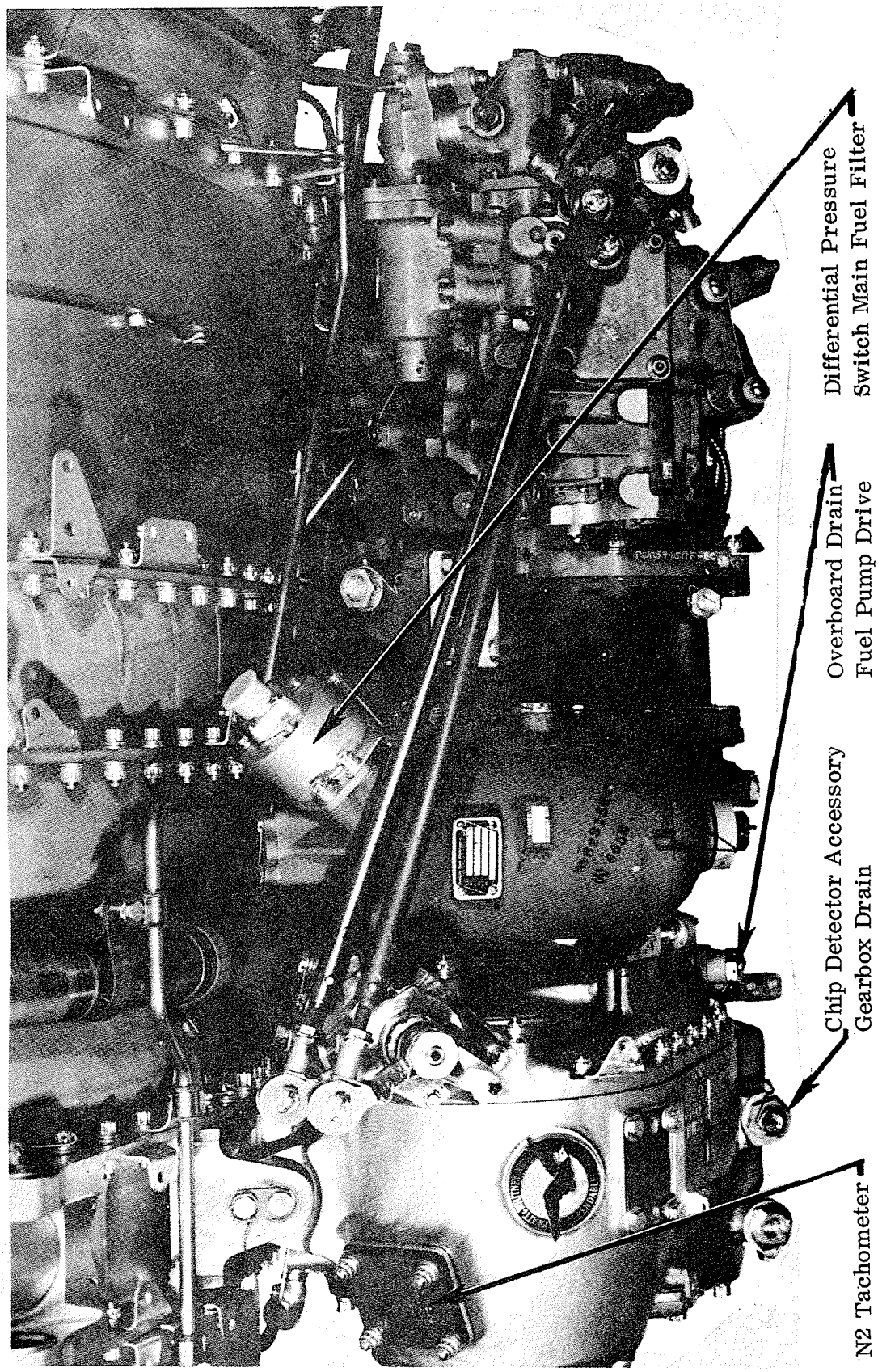

ENGINE VIEW (RIGHT LOWER FRONT)

Figure 1-13

CHIP DETECTOR LOCATION

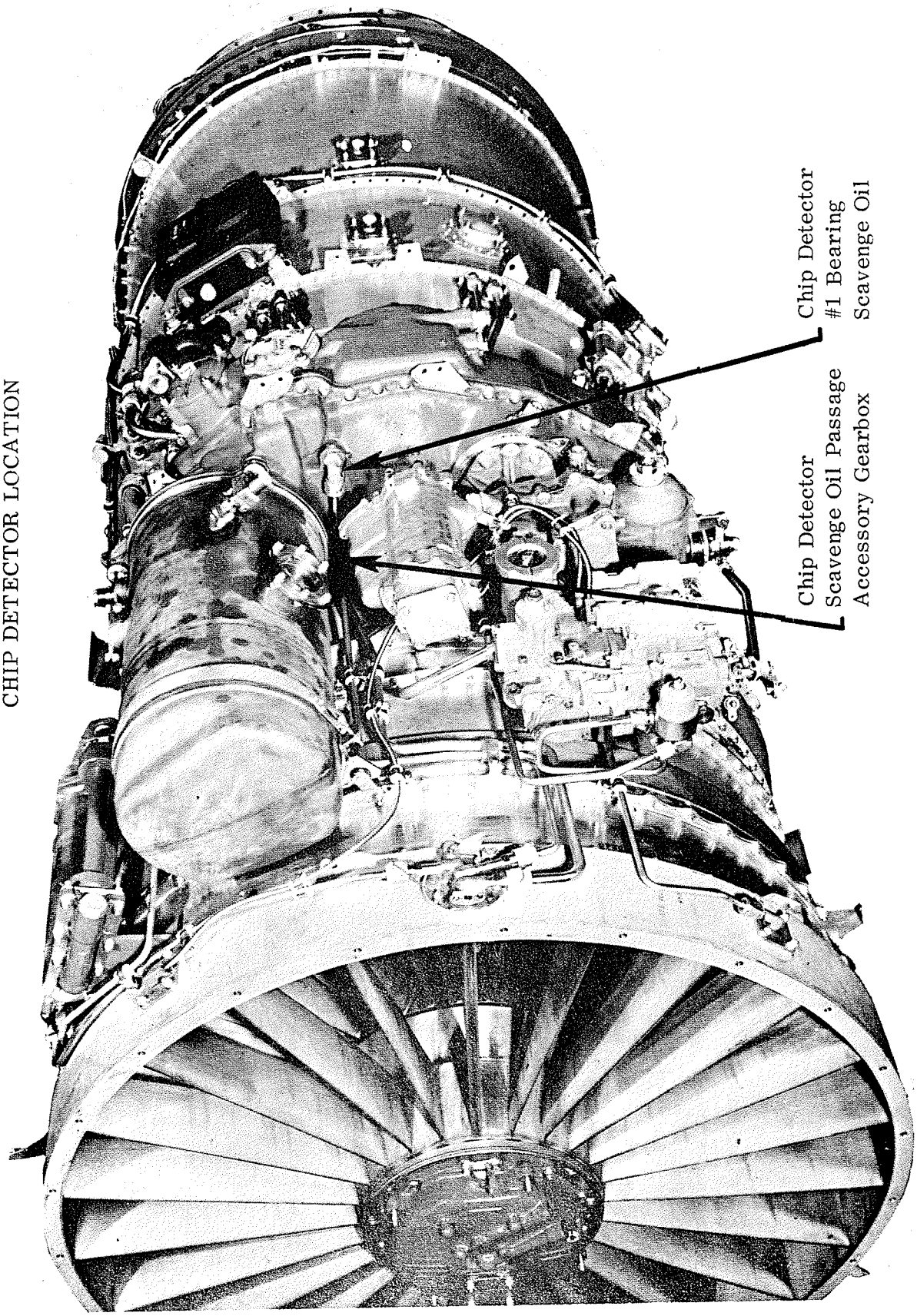

Figure 1-14

N. Excessive Oil Consumption

Visually inspect the following areas for leaks:

	Possible Causes	Isolation Procedures	Corrective Action
1)	External tubing leakage	Inspect oil pressure, breather and scavenge tubes for evidence of leaking.	Replace seal and retorque fitting.
2)	Overboard breather discharging oil	Check for over-servicing of engine oil system. Refer to breather pressure check in Para. 1-6 and 1-7. Perform breather pressure check. If check is within limits, de-oiler carbon seal is at fault.	(See Figure 1-15) Remove accessory gearbox, remove cover and replace carbon seal. Reinstall the gearbox. CAUTION: Perform airflow check per JT8D Overhaul Manual.
		If breather pressure is over limit determine source of excessive pressure.	Remove engine and disassemble as necessary to determine cause.
		(See Figure 1-3 and 1-4). Check for accessory gearbox scavenge pump failure.	Replace pump
3)	Inspect fan duct for oil wetting	Visually determine source of oil. Inspect for oil streaking at the 7:00 strut area.	Repair as required.

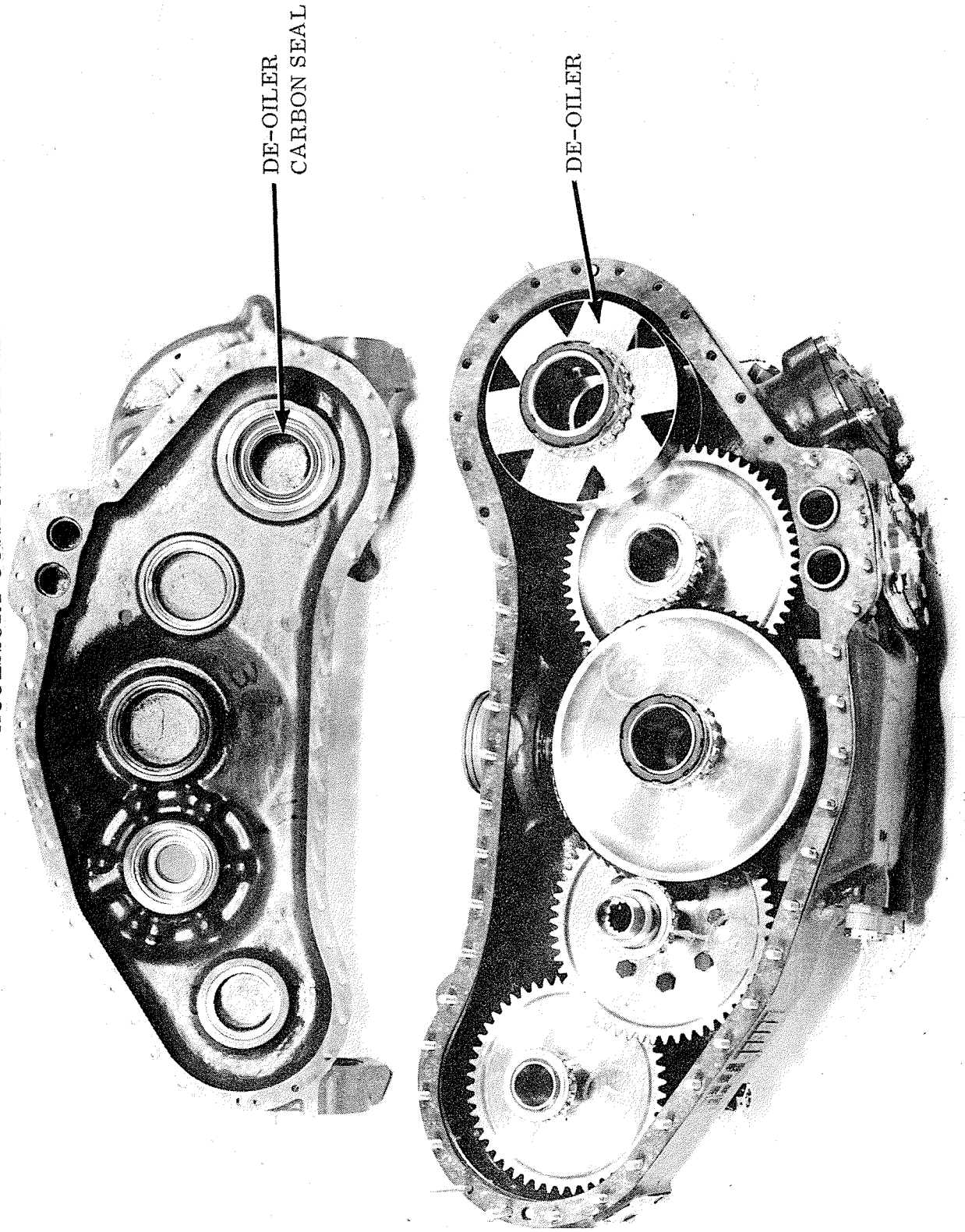

Figure 1-15

Possible Causes	Isolation Procedures	Corrective Action
4) Inspect core engine exhaust case.		
NOTE: Slight oil wetting, without puddling, is acceptable up to 20 minutes after initial shutdown of engine. Heavy puddling after 20 minutes is normal, and is the result of static leakage past the Number 6 carbon seals.		
5) Excessive puddling of oil in exhaust case within 20 minutes after engine shutdown.	Visually inspect for source. Numbers 4-1/2 and 6 pressure tube failure is a possible cause.	
	Failed Number 6 carbon seals	Remove exhaust case and replace seals.
	Failure of Number 6 scavenge pump. Remove tail cone, Number 6 bearing compartment cover, and inspect pump.	If pump has failed, inspect Number 4-1/2 bearing, and carbon seal details for oil starvation. Replace pump.
	Cracked Number 6 sump housing.	Replace Number 6 sump housing.

Possible Causes	Isolation Procedures	Corrective Action
6) Heavy oil wetting in nose cone area	(See Figure 1-16). Check condition of front accessory cover seal. (See Figure 1-17). Check PT2 ferrule seal on front accessory cover. Check tach wire ferrule seals.	Replace seals
7) Oil discharge from N1 tach wire lead at connector. (See Figure 1-3)	(See Figure 1-17). Check tach wire ferrule seal at Number 1 bearing support.	Replace seals
8) Oil discharge from inlet case water drain plug	(See Figure 1-18). Remove connector and check all oil tube seals.	Replace seals
	(See Figure 1-17). Check PT2 ferrule seals at Number 1 bearing housing end.	
	(See Figure 1-18). Pressure test breather pressure, and scavenge oil tubes located in the 6 o'clock strut.	
	***(See Figure 1-19). Remove Number 1 bearing housing from inlet case. Check seals on pressure, scavenge and, breather oil tubes.	Replace seals

***Refer to JT8D Overhaul Manual for Procedures

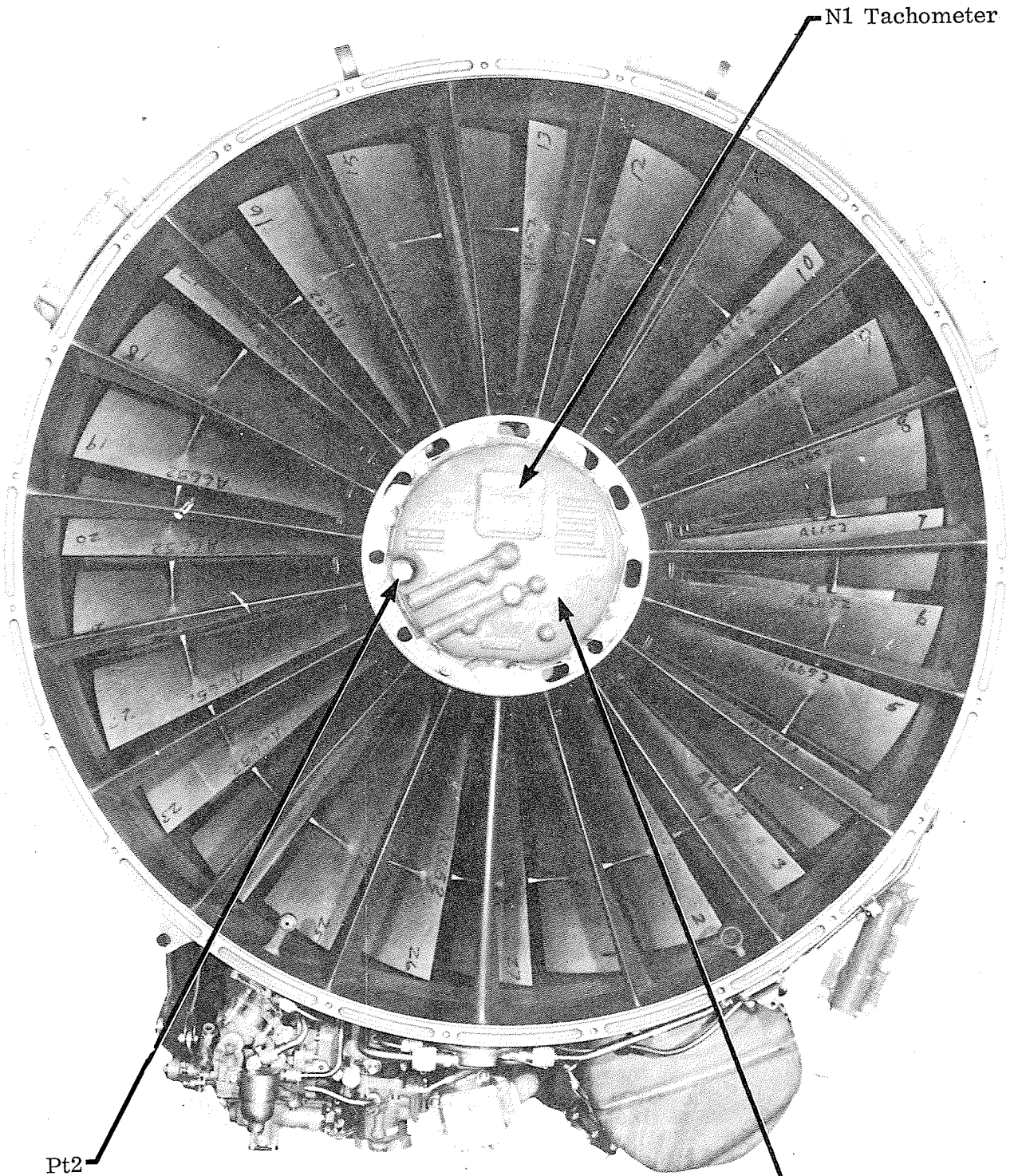

ENGINE VIEW (FRONT)

Figure 1-16

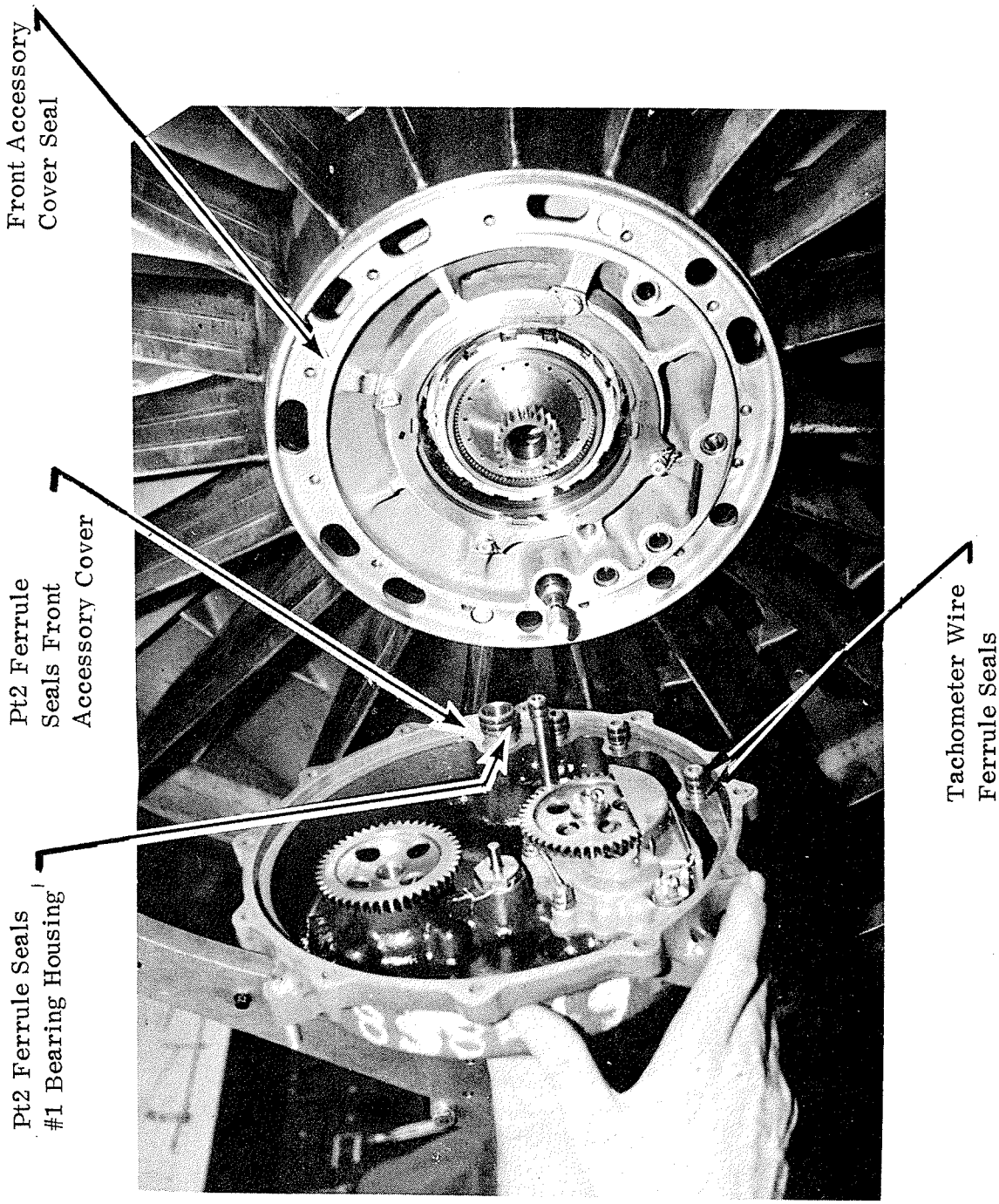

FRONT ACCESSORY COVER

Figure 1-17

"O" RING SEALS LOCATION

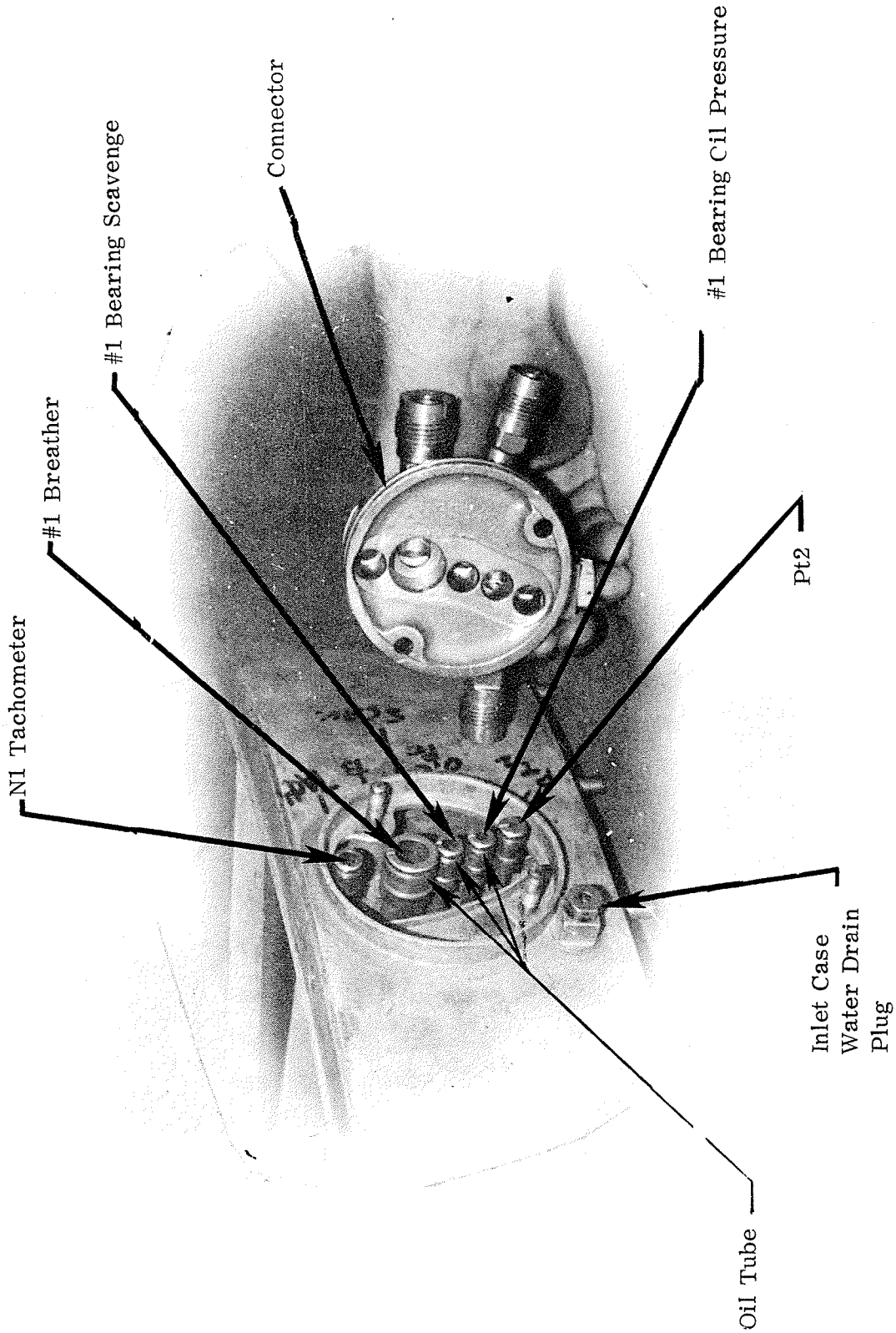

Figure 1-18

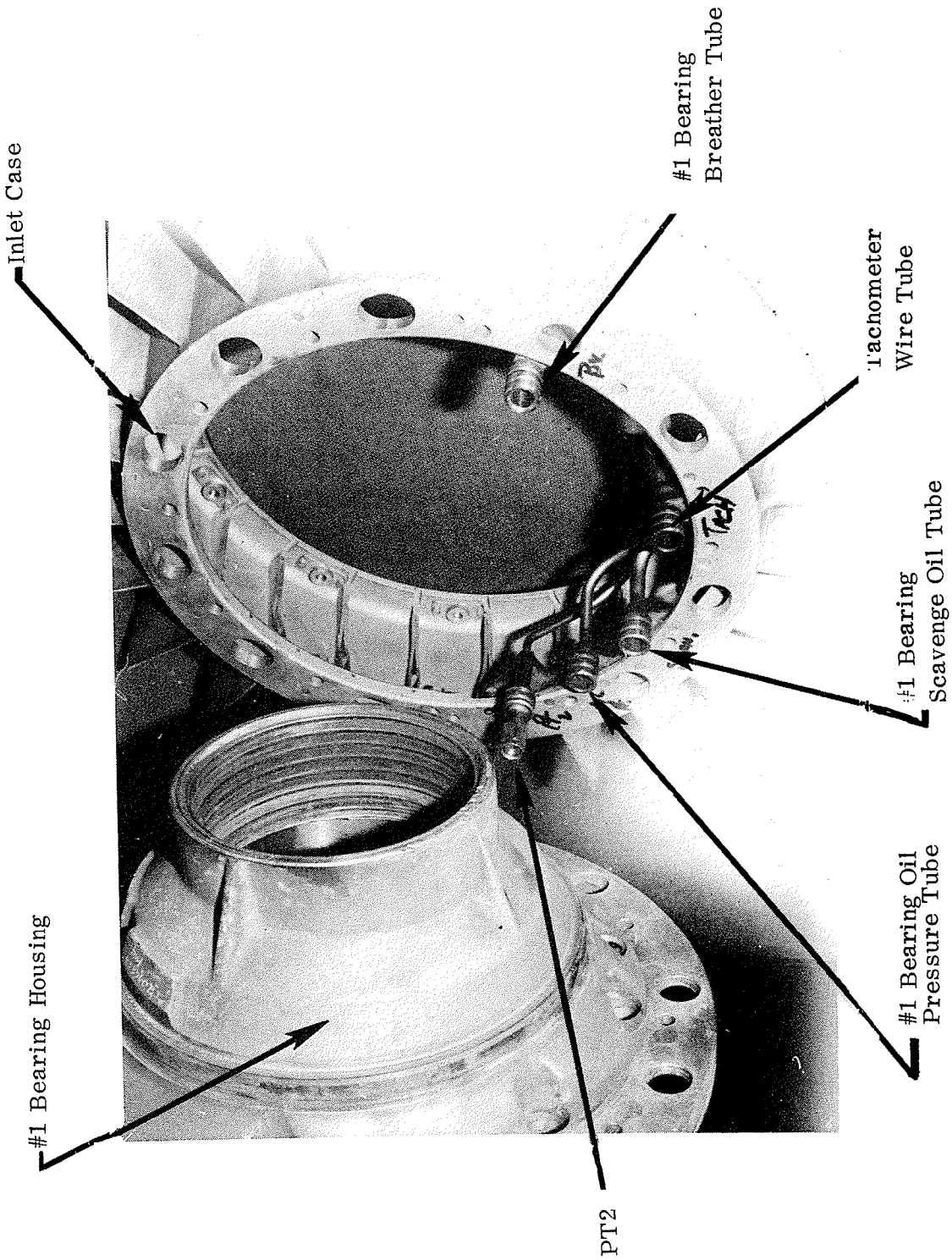

NUMBER ONE BEARING HOUSING

Figure 1-19

Possible Causes	Isolation Procedures	Corrective Action
9) Accessory Component drive carbon seals. (Hydraulic pump, engine fuel pump and starter).	(See Figures 1-6 and 1-13) Disconnect overboard drains and install clear plastic bags to drain fittings.	
	Run engine short time and then observe for abnormal oil leakage.	Remove component and replace carbon seal.
O. Increasing Oil Quantity		
1) Fuel oil cooler (leak in cooler core causing fuel leakage into oil system).	(See Figure 1-11)	Remove and replace

1-6. BREATHER PRESSURE CHECK

A. The engine oil system breather pressure limits published in the P&WA manuals are non-Q.E.C. limits. When the engine is installed in the aircraft, the airframe breather exit duct inhibits the flow of breather air from the engine resulting in a back pressure.

B. To obtain an accurate indication of the engine breather pressure, the various aircraft exit duct back pressures must be considered. The following table lists the back pressures for the various airframe exit ducts.

TABLE 1-1

Model	Position	Airframe Back Pressure
B727-100/200	Pod	.375 psig
B727-100/200	Center	.68 psig
*B727-200	Center	1.5 psig
B737	Both	2.1531 psig
DC-9	Both	1.2 psig

*With fixed tail skid installed

1-7. BREATHER PRESSURE ISOLATION PROCEDURE

A. Install pressure gage into locally modified oil tank (See Figure 1-20).

B. Start the engine and accelerate to take-off power. Record the pressure gage reading.

C. Subtract the back pressure listed in the Table 1-1 from the observed reading and compare this adjusted reading with the non-Q.E.C. limits listed in the JT8D Maintenance Manual test section.

D. If the adjusted reading obtained in Step (C) is close to or over the maximum limit, proceed to Step (E).

E. (See Figure 1-16). Install the pressure gage at the pressure oil transmitter vent. Make certain the complete airframe breather system duct is connected and repeat Steps (B) and (C).

NOTE: A more accurate reading is obtained at the pressure oil transmitter vent than at the oil tank cap as described in Step (A). This id due to the losses resulting from the internal tubes that connect the oil tank breather to the accessory gearbox.

F. If the above check in Step (E) is still over maximum limits, check the airframe exit duct for obstructions. If exit duct system is free from obstructions, remove the engine and disassemble as necessary to determine cause of excessive breather pressure.

LOCAL MANUFACTURE OIL TANK CAP

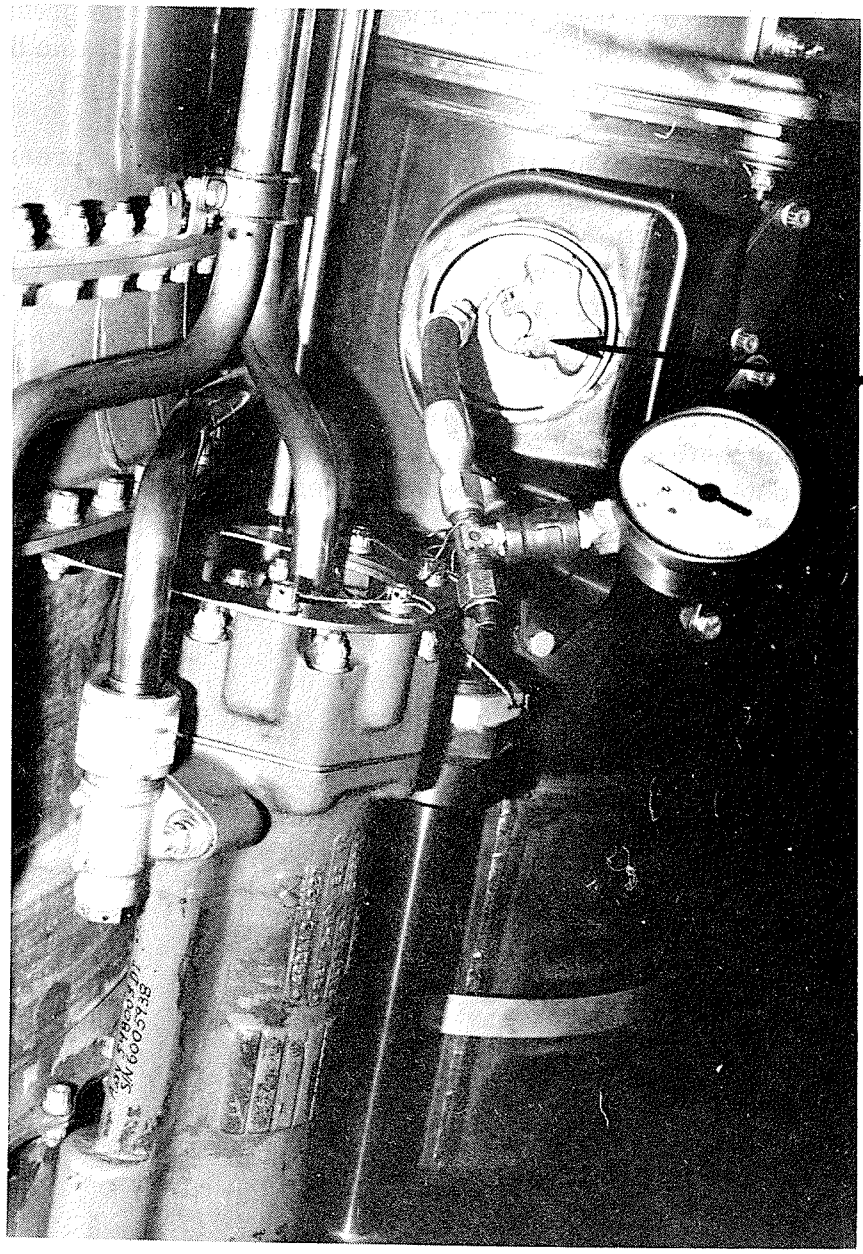

Figure 1-20

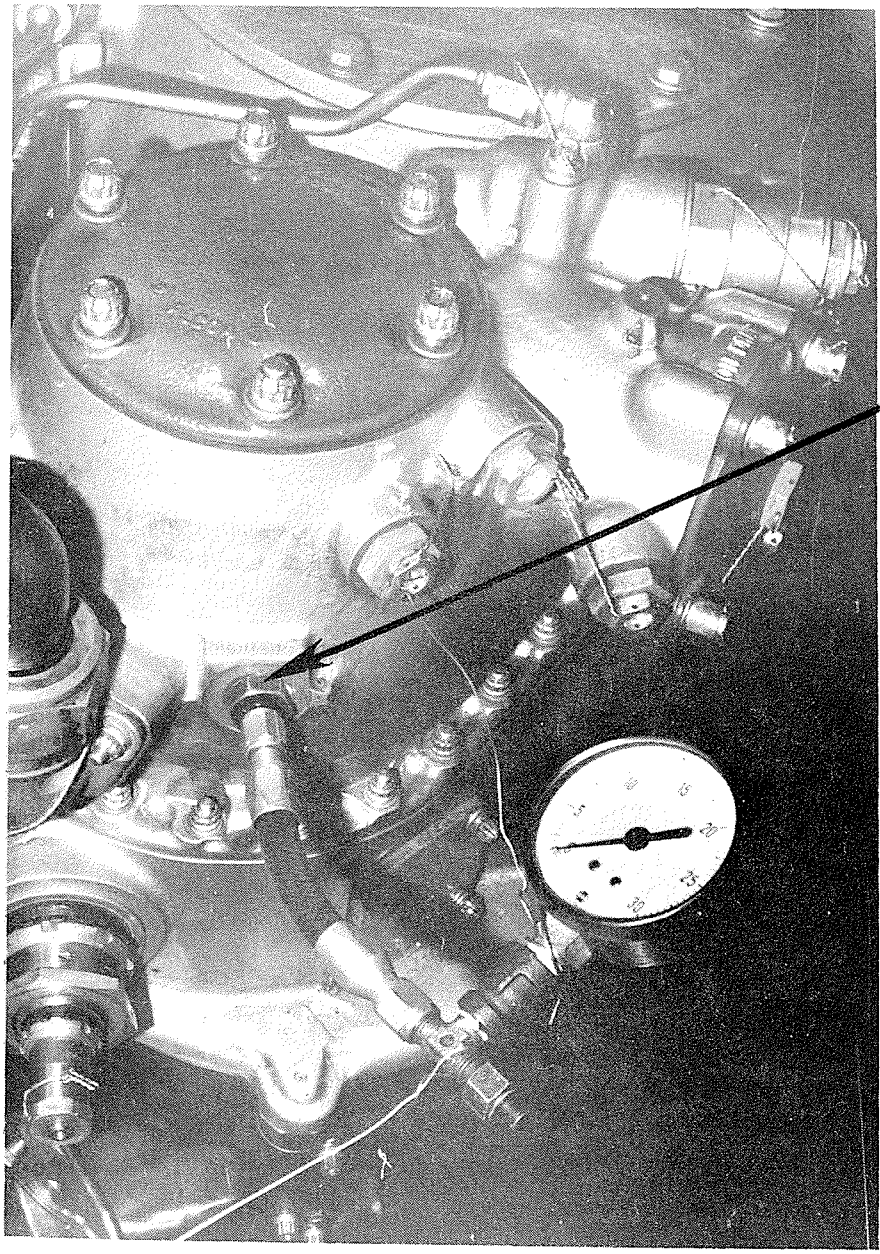

ACCESSORY COMPONENT GEARBOX (LEFT SIDE)

Figure 1-21

SECTION II

ANTI-SURGE BLEED SYSTEM

SECTION II

BLEED SYSTEM

2-1. GENERAL

A. The JT8D anti-surge bleed system is designed to permit operational flexibility by preventing compressor stall when the compressor system is operating at low thrust levels.

B. Compressor stability is maintained by bleeding 13th stage air into the fan discharge duct through two (2) bleed valves located on the core engine diffuser case. The opening of these valves is automatic and is accomplished thru the use of a Pressure Ratio Bleed Control (PRBC) located on the lower right side of the fan diffuser case. The bleed valves and PRBC are connected by tubing as shown in Figure 1-10.

2-2. SENSE PRESSURES

A. Input sense pressures to the PRBC are (1) low pressure compressor discharge static pressure (Ps3), and (2) compressor inlet total pressure (Pt2). High pressure compressor discharge static pressure (Ps4) is also delivered to the PRBC but as an actuating, or muscle pressure (See Figure 1-10).

2-3. OPERATION

A. Within the PRBC the two sense pressures, Ps3 and Pt2, are converted to a ratio Ps3/Pt2. When the appropriate ratio of Ps3/Pt2 is attained, the PRBC ports Ps4 actuating pressure to the two 13th stage bleed valves causing them to close. During engine deceleration, Ps3/Pt2 decays to a predetermined value which terminates the flow of Ps4 actuating pressure at the PRBC. At this time, internal engine pressure causes the two 13th stage bleed valves to open.

B. A sectional view of the PRBC, and one bleed valve shown in both the closed and open positions is given in Figure 2-1. The simplified system schematic in Figure 2-2 is provided to facilitate trouble-shooting.

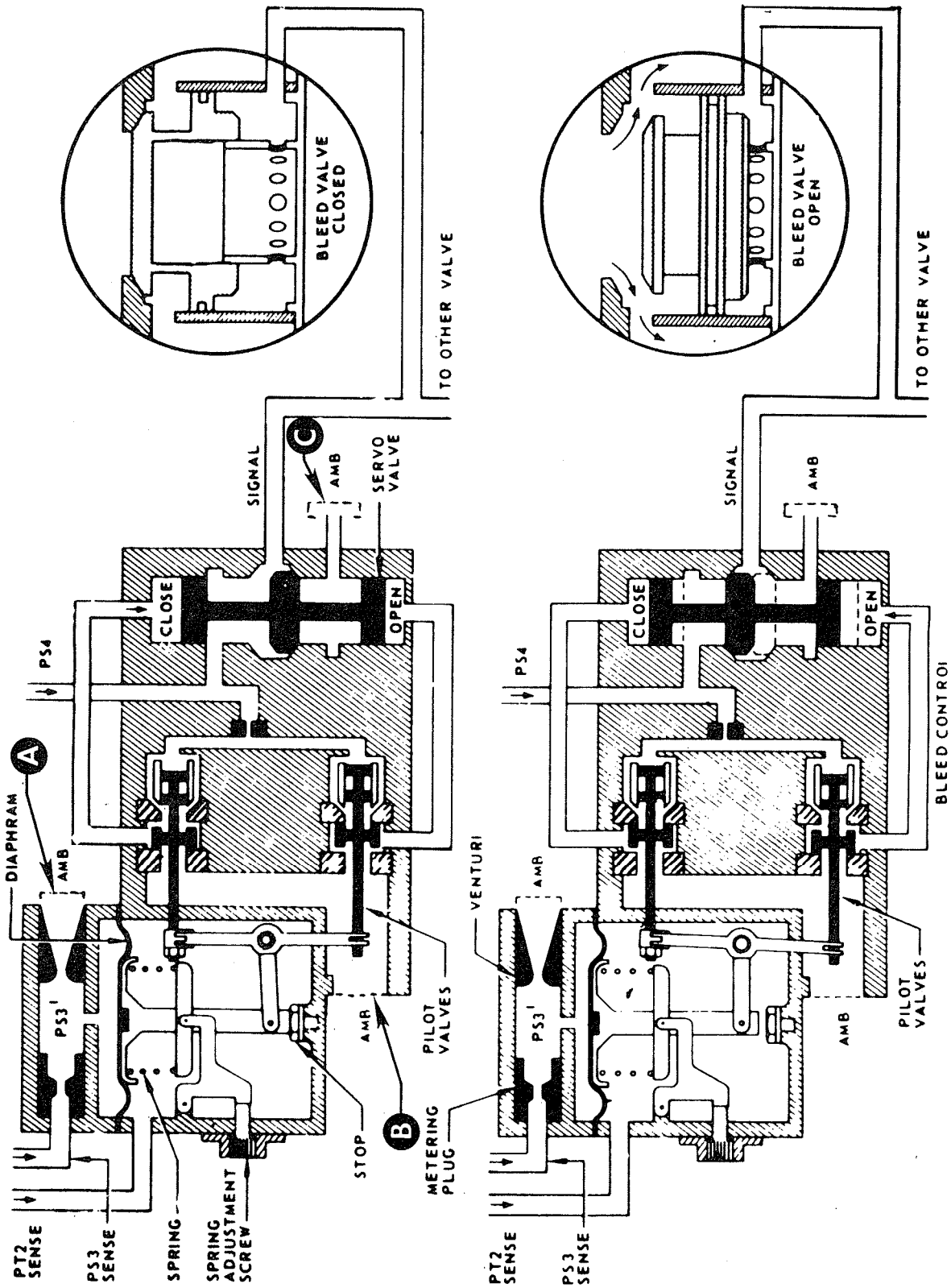

ENGINE PRESSURE RATIO SYSTEM SCHEMATIC

Bleed Valve System

Figure 2-1

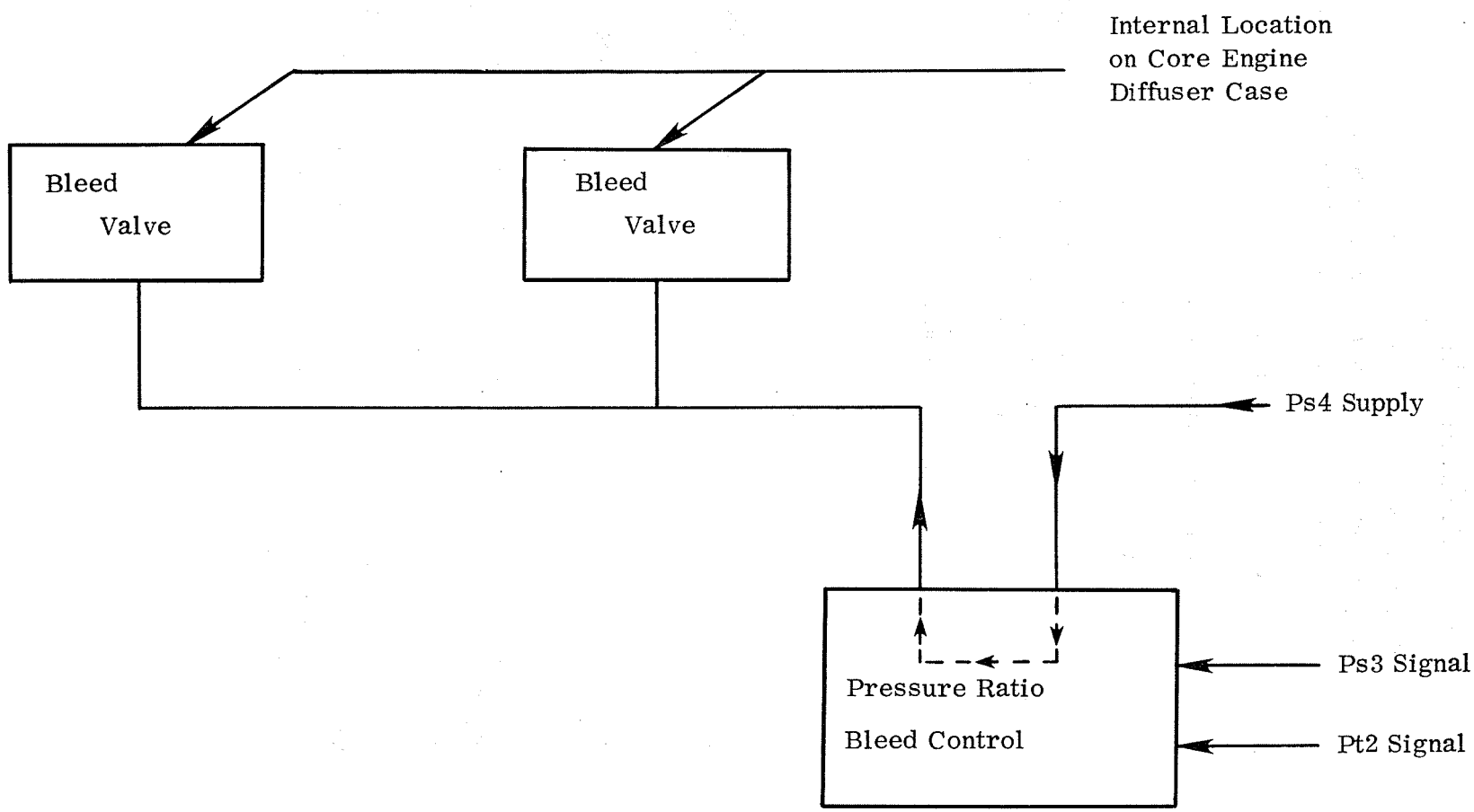

ANTI-SURGE BLEED SYSTEM SCHEMATIC

Figure 2-2

2-4. BLEED SCHEDULE CHECK PROCEDURE

A. The Bleed Schedule Check is designed to determine if the bleed valves are opening and closing within the appropriate band of N1 compressor speed versus ambient temperature, and field barometric pressure.

B. Confirmation of Bleed Valve Scheduling

1) Determine the ambient temperature.

2) Determine the field barometric pressure.

3) From the bleed valve schedule curves in the Aircraft Maintenance Manual (Figure 6-10) determine the bleed opening, and closing points as a function of N1 compressor speed.

4) Assure that aircraft service bleed is off.

5) Perform a normal start.

6) Slowly accelerate the engine while observing N1 RPM and E.P.R.

7) At bleed valve closure the operator should witness a sudden E.P.R. increase of .06 to .07 E.P.R. units. N1 RPM should increase 5 to 6 percent.

8) Determine the bleed opening point by slowly decelerating the engine while observing N1 and E.P.R.

9) At bleed opening, there should occur a sudden E.P.R. decrease of .06 to .07 E.P.R. units accompanied by a 5 to 6 percent decrease in N1.

10) If there is no indication of bleed closure or opening, or should opening and closure occur outside of the bleed schedule band in Figure 6-10, refer to the Fault Isolation Procedure, (Paragraph 2-5).

2-5. FAULT ISOLATION PROCEDURES

A. Visually inspect the three PRBC vent screens for cleanliness, and freedom from obstruction. (See Figure 2-3)

B. Inspect the external Ps3, Ps4, and Pt2 lines for integrity, cracks, and freedom from obstruction. (See Figure 1-10)

C. Remove and visually inspect the Ps3 filter for contamination. (See Figures 1-9 and 2-4)

D. Check the Ps4 line for integrity, and the bleed valves for freedom of operation.

1) Disconnect the Ps4 line to the bleed valves at the fan diffuser case (See Figure 1-10, Insert A). Using an adapter, blow into the fitting and listen for two distinct metallic sounds. They indicate that the bleed valves have closed. An increase in pressure while blowing into the fitting assures the integrity of the internal Ps4 line.

2) If an increase in pressure is noted, and there is no audible indication of bleed valve closure, the bleed valves may be considered stuck open or closed.

E. Check for proper Ps3 sense pressure

1) Connect a standard 100 psig pressure gage to the fitting on the Ps3 filter housing. (See Figure 2-4).

2) Operate the engine assuring that the N1 speed is slightly higher than the closure point determined from the Bleed Schedule in the Aircraft Maintenance Manual. (See Figure 6-10).

3) The pressure reading should be approximately 15 psig.

4) If low or zero reading is obtained, the internal Ps3 supply line to the Ps3 filter is restricted, loose or broken. (See Figure 1-9, Insert A).

NOTE: Some instances of off-idle stall, due to premature bleed valve closure, have been caused by 8th stage air pressurizing the Ps3 line. In these instances, improper length bolts had been used to join the intermediate case to the diffuser case front flange. The bolts chafed through the Ps3 line inside the engine, where the line is surrounded by 8th stage air.

When the above condition is suspected, perform the following isolation procedures.

F. Check for 8th stage air leak into internal Ps3 sense line.

1) Connect a standard 100 psi gage to the fitting on the Ps3 filter housing (Figure 2-4).

2) Operate the engine at an N1 RPM slightly below the scheduled bleed valve closure point (Figure 6-10).

3) If the gage pressure exceeds 15 psig, it is likely that 8th stage air is pressurizing the internal Ps3 line, and causing premature bleed valve closure.

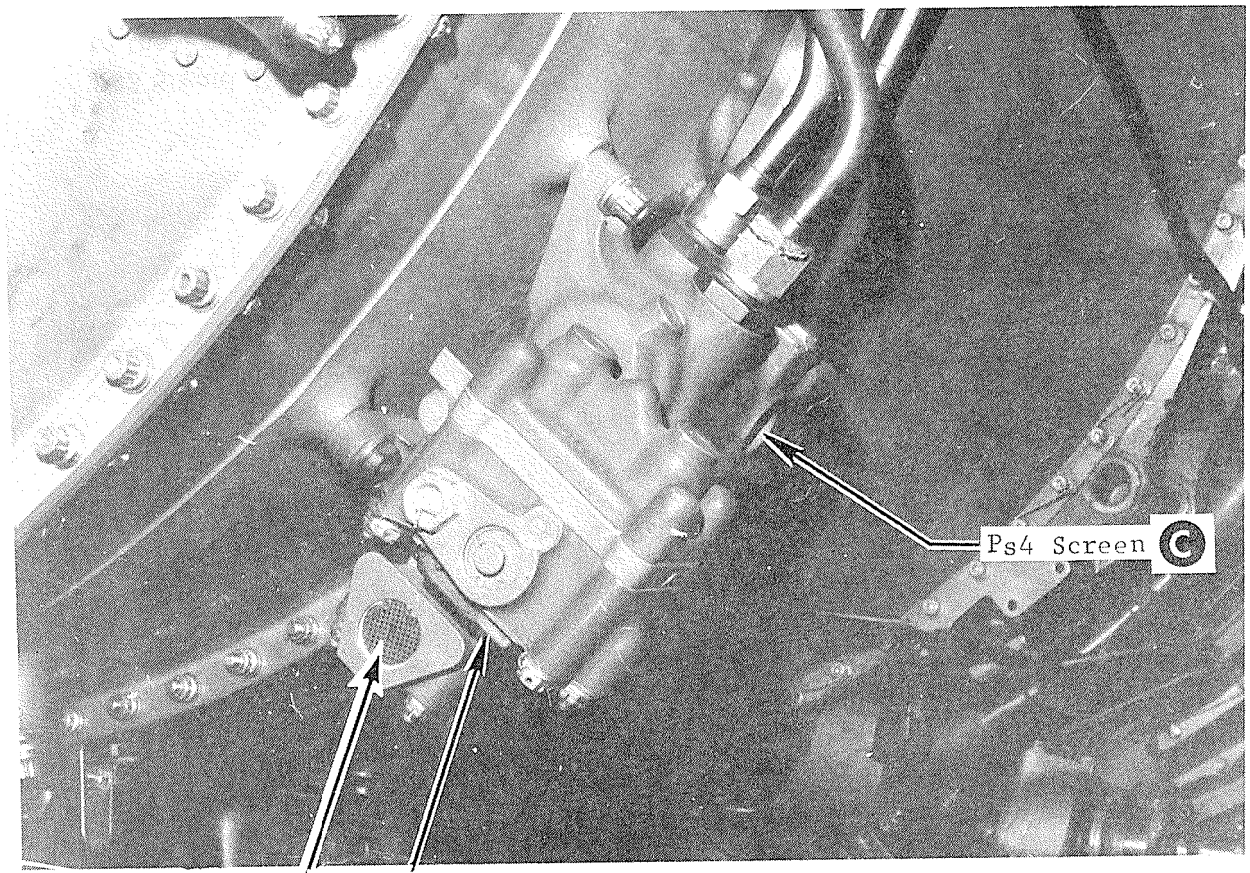

A Ps3 Vent & Venturi Cavity

Cavity Screen B

NOTE: References A, B, and C are shown schematically in Figure 2-1

PRESSURE RATIO BLEED CONTROL

Figure 2-3

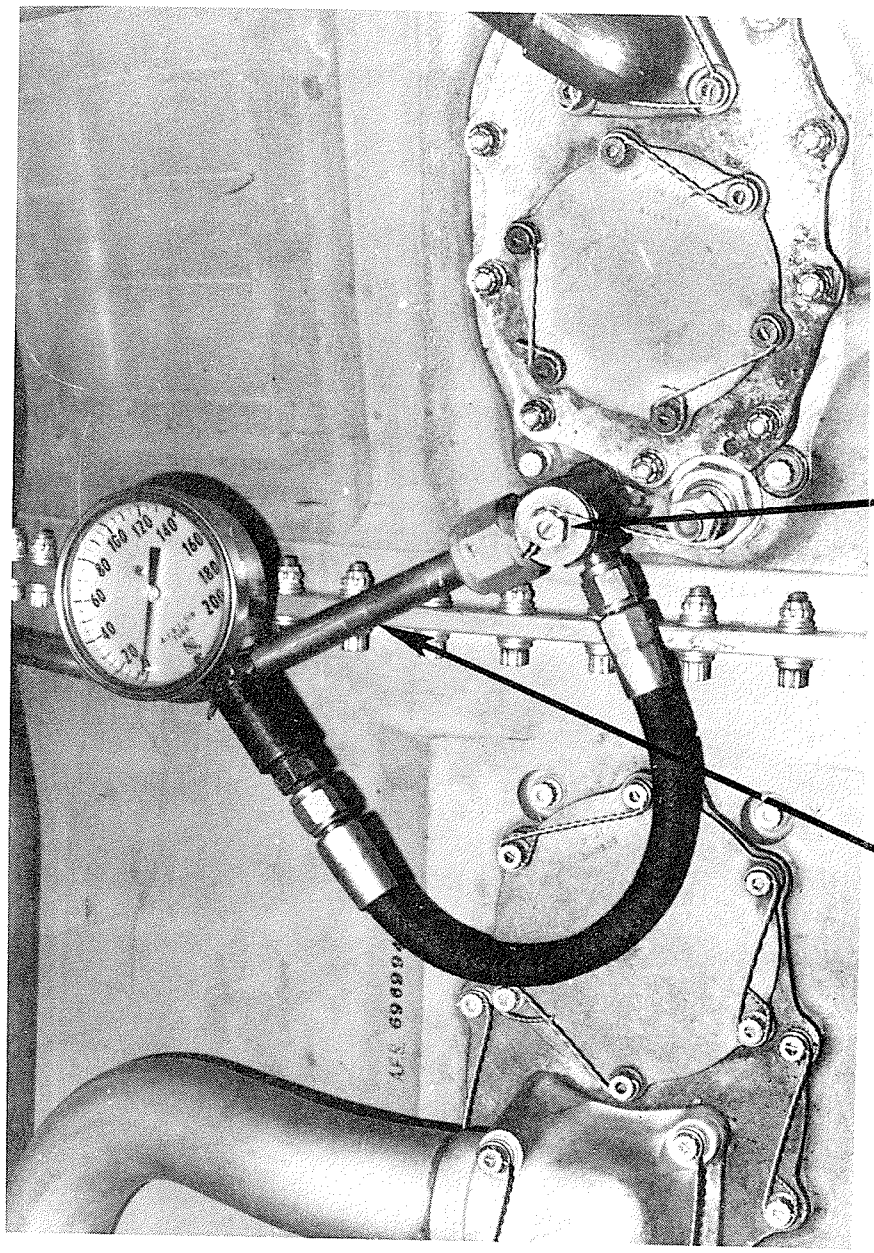

P_{s3} SIGNAL PRESSURE SOURCE

Bleed Valve
System

Figure 2-4

SECTION III

INDICATING SYSTEMS

3-2. ENGINE PRESSURE RATIO SYSTEM FAULT ISOLATION TABLE

A. Engine Pressure Ratio System Inoperative

Possible Causes	Isolation Procedures	Corrective Action
1) Defective pressure ratio indicator	Interchange indicator electrical connectors, and operate engine.	If opposite indicator operates, replace defective indicator.
2) Defective pressure ratio transmitter, or wiring	*Check circuit breaker. Check for power to transmitter	Reset if necessary. If required power is available, replace transmitter.
	*If there is no power to transmitter, check wiring.	Repair as required

B. Engine Pressure Ratio Indicator Fluctuates

1) Defective pressure ratio indicator	Perform checks in Paragraphs 3-2A1, 3-2A2.	Replace indicator or transmitter
2) Loose Pt2 connections at transmitter, or in the nose cone	(See Figure 1-16). *Check all Pt2 connections at transmitter and nose cone	Torque loose fittings
3) Damaged "O" ring seal in the inlet case Pt2 connector	(See Figure 1-18). Remove connector at the 6 o'clock strut, and check Pt2 "O" ring seals.	Replace seals

*Refer to Aircraft Maintenance Manual for Procedures

	Possible Causes	Isolation Procedures	Corrective Action
4)	Cracked Pt2 line in the inlet case 6 o'clock strut	Pressure test line (See Figure 1-18)	Replace line

C. Engine Pressure Ratio Drops Excessively when Engine Anti-Ice System is Turned On (8th stage anti-icing air is pressurizing the Pt2 system)

	Possible Causes	Isolation Procedures	Corrective Action
1)	Defective Pt2 connector in the nose cone, or inlet case	*Check for loose fittings in the nose cone (See Figure 1-16).	Repair
		Remove connector at 6 o'clock strut on inlet case and check "O" ring seal (See Figure 1-18)	Replace seal
2)	Cracked Pt2 line in inlet case 6 o'clock strut	(See Figure 1-18). Pressure test Pt2 line in the 6 o'clock strut	Replace Pt2 line

D. Engine Pressure Ratio Leads Low (Red line E.G.T. limit reached before attaining desired EPR.)

	Possible Causes	Isolation Procedures	Corrective Action
1)	Defective indicator	Interchange indicator electrical connectors and operate engine.	If opposite indicator operates properly, replace faulty indicator.

*Refer to Aircraft Maintenance Manual for Procedures

	Possible Causes	Isolation Procedures	Corrective Action
2)	Defective E.G.T. system	Refer to Paragraph 3-5 thru 3-7	----------
3)	Exhaust gas pressure (Pt7) line loose at transmitter, or at Pt7 manifold external fitting.	*Check fittings for looseness (See Figure 1-9).	Torque loose fittings
4)	Obstruction in Pt7 line from engine connection to EPR transmitter.	*Disconnect (Pt7) line at transmitter and engine (See Figure 1-9).	Clear line of obstruction
5)	Obstruction in the engine Pt7 lines, or probes	(See Figures 1-9 and Figure 3-2). Introduce 10 psig of clean filtered air, or nitrogen, into engine Pt7 system. Check each probe for obstruction by passing hand along the forward plane of each Pt7 probe.	Clean engine Pt7 system. (Refer to the JT8D Maintenance Manual)
6)	Leak in the engine Pt7 system	Block off the Pt7 probes using clamps and good quality rubber hoses and apply 10 psig of clean filtered air or nitrogen. Close off pressure source. Check to see if engine system will hold pressure. (See Figure 1-9).	Tighten fittings. Replace broken or cracked lines. NOTE: These items may be accomplished on the engine installed in the aircraft.

*Refer to Aircraft Maintenance Manual for Procedures

EGT & Pt7 PROBE LOCATIONS

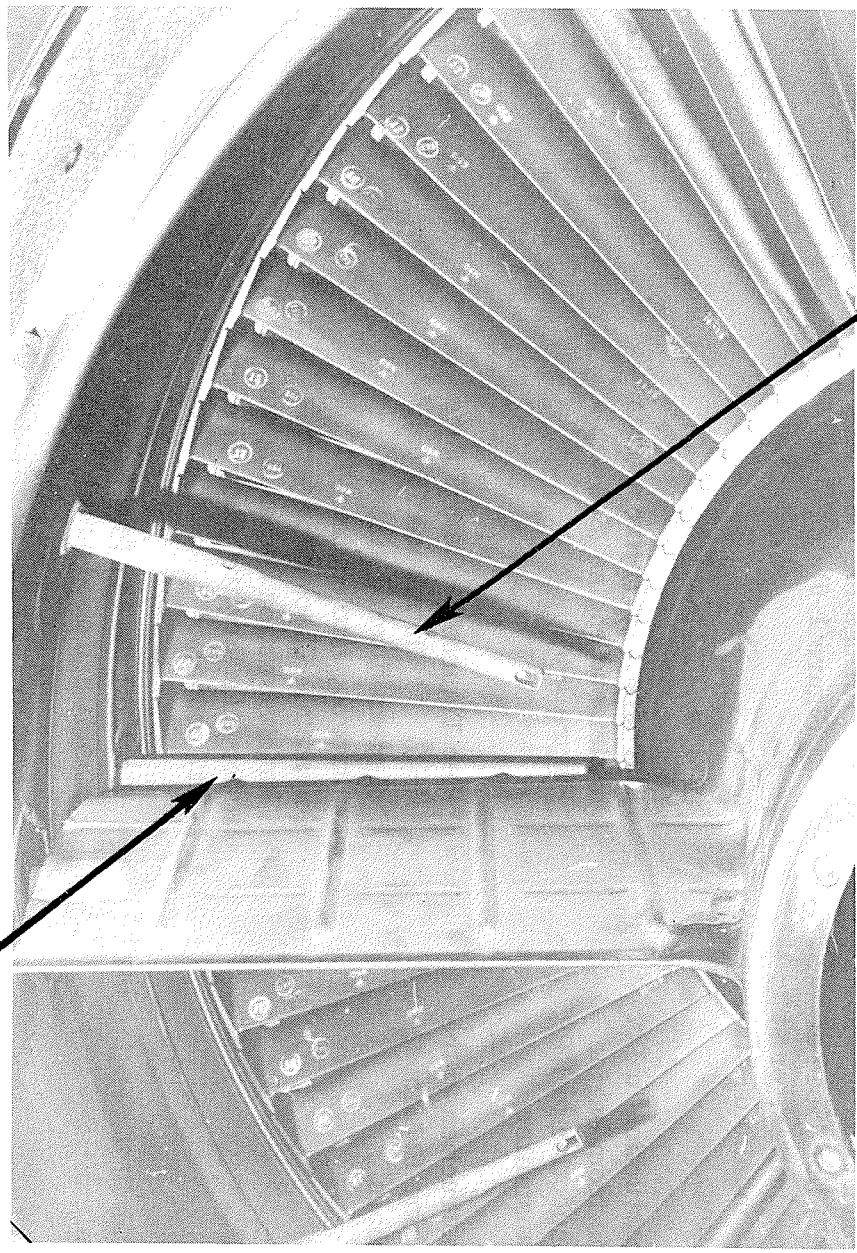

Figure 3-2

3-3. ENGINE TACHOMETER SYSTEM - DESCRIPTION AND OPERATION

A. General

The engine tachometer system measures the speed of the low pressure, and high pressure compressor rotors and provides visual speed indication to the pilots for monitoring engine performance. The engine tachometer system consists of two generator units (N1 and N2) on each engine, and corresponding tachometer indicators on the engine instrument panel. The N1 tachometer indicator shows the speed of the low pressure compressor. The N2 tachometer indicator shows the speed of the high pressure compressor. (See Figure 3-3).

B. Operation

1) The engine tachometer system operates on self-generated electrical power. Airframe electrical power is only required for the integral lighting of the tachometer indicators.

2) Each tachometer generator (N1 and N2), is driven by its respective compressor rotor through reduction gearing. The generator drive shaft turns the rotor assembly inside the stator coils, thus generating alternating signals. These signals are transmitted to the corresponding tachometer indicator by a two wire system, while the third phase is completed to ground. The alternating electrical signals cause the drive shaft of the indicator synchronous motor to rotate.

C. This rotation, through a flux coupling, tends to rotate the indicator pointer which is restrained by a spring. The speed of the synchronous motor determines the degree to which the indicator pointer is rotated, and corresponds to the related compressor rotor speed. The round indicator dial is graduated for readings between zero and 110 percent compressor rpm. The small subdial is graduated in ten divisions for each 10 percent change in speed.

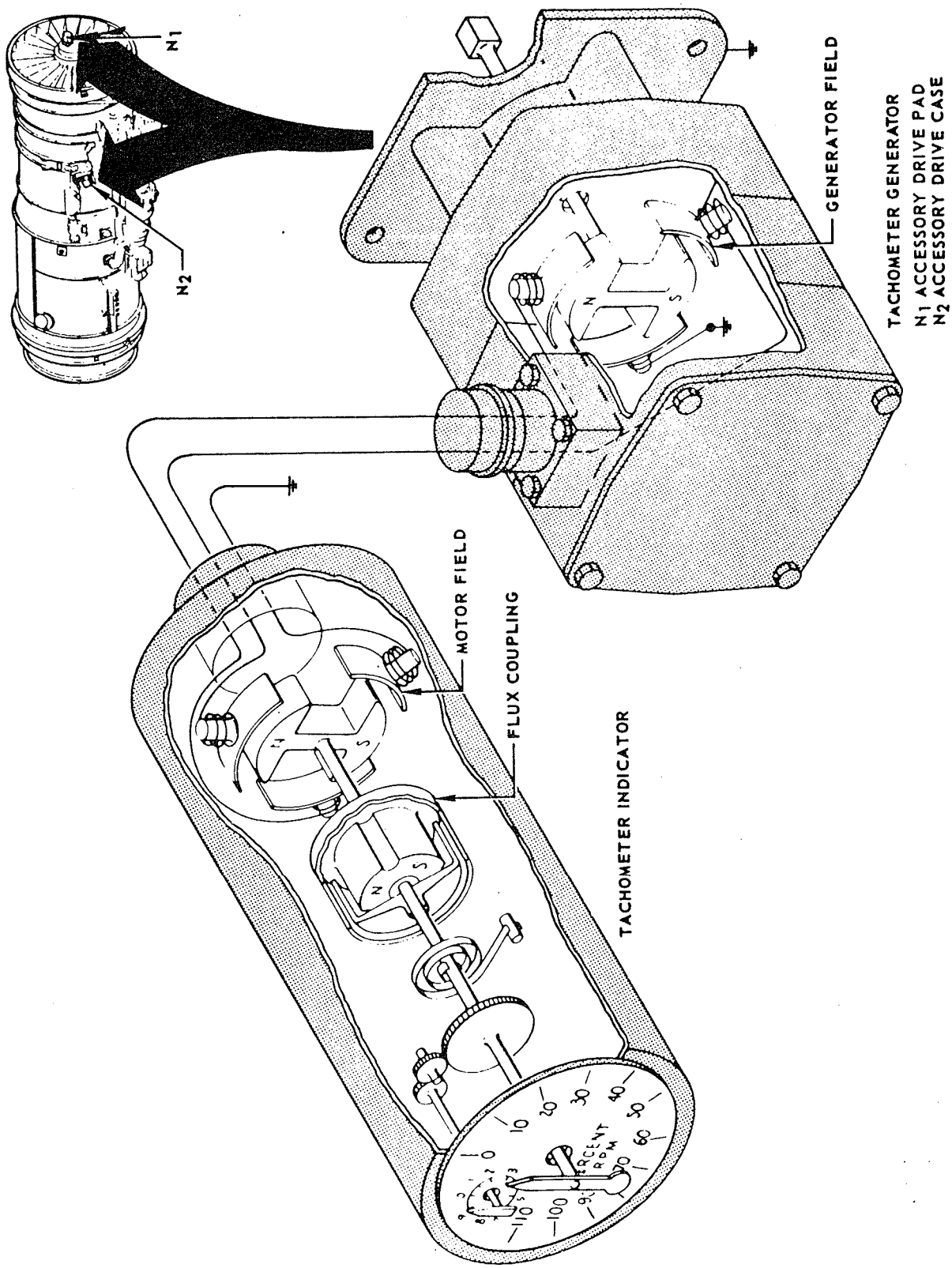

TACHOMETER INDICATING SYSTEMS

Tachometer System

Figure 3-3

3-4. ENGINE TACHOMETER SYSTEM FAULT ISOLATION TABLE

A. No, N1 or N2 Indication

Possible Causes	Isolation Procedure	Corrective Action
1) Compressor or turbines seized	Check N1 for freedom of rotation	
	Check N2 for freedom of rotation	Remove engine
	Remove starter and using proper tool attempt to rotate N2.	
2) Defective indicator	*Interchange indicator electrical connections and operate engine.	If opposite indicator operates, replace defective indicator.
3) Defective wiring or connectors	*Perform continuity check	Repair as required
4) Defective Tachometer generator	*	Replace tachometer generator

B. Engine Tachometer Indicator Fluctuates (N1) - (N2)

1) Defective indicator	*Interchange Indicator electrical connectors and operate engine.	If opposite indicator operates, replace defective indicator.
2) Defective wiring or connectors	*Perform continuity check	Repair as required

*Refer to Aircraft Maintenance Manual for Procedures

	Possible Causes	Isolation Procedure	Corrective Action
3)	Defective Tachometer Generator	*	Replace Tachometer generator
4)	Ovalation of N1 Tachometer Drive Gear	(See Figure 3-4). Remove front accessory gear box cover.	Replace N1 Tachometer drive gear.

*Refer to Aircraft Maintenance Manual for Procedures

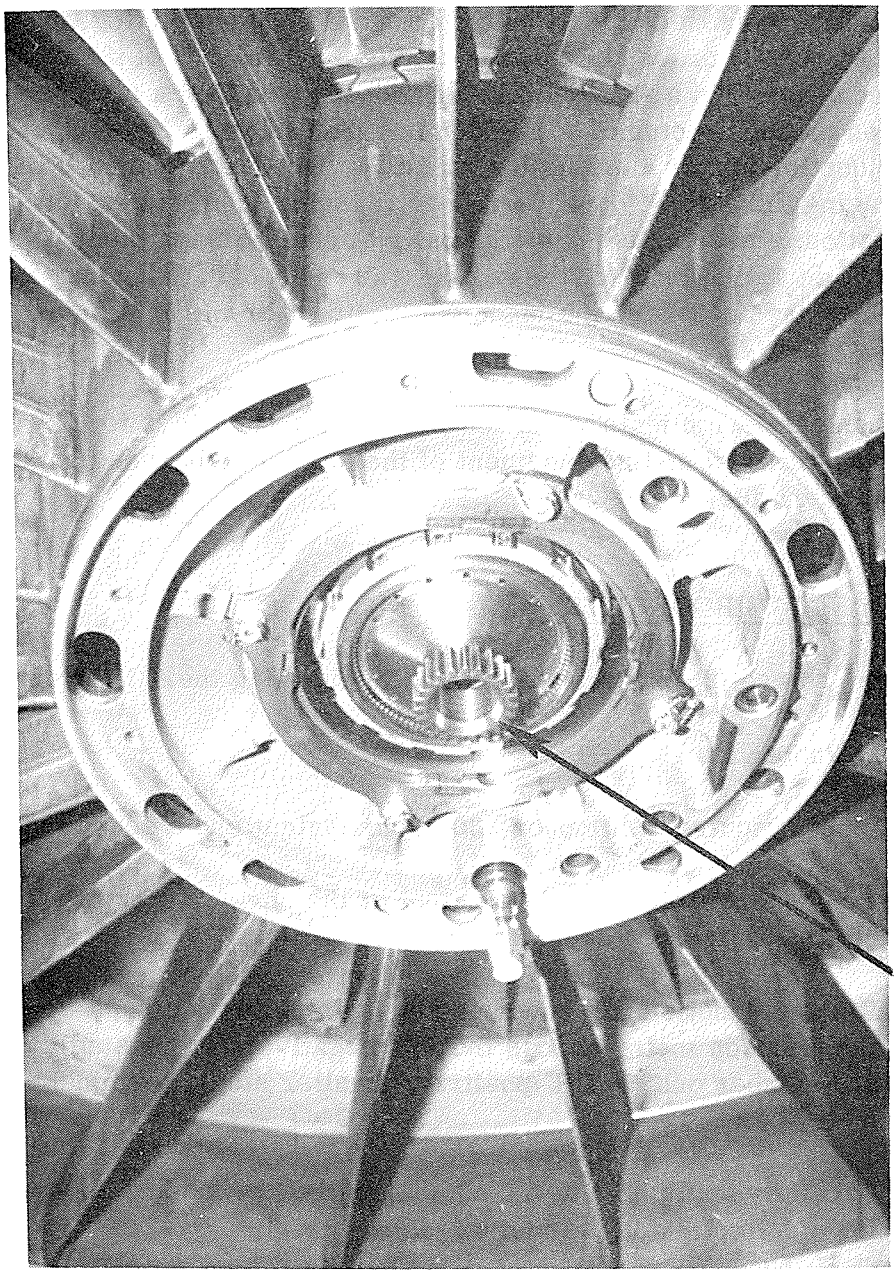

N_1 TACHOMETER DRIVE GEAR

Figure 3-4

3-5. EXHAUST GAS TEMPERATURE (EGT) SYSTEM

A. General

There are eight (8), EGT thermocouple probes located in the JT8D core engine gaspath (See Figure 3-2). The thermocouple probes are numbered consecutively in a clockwise fashion starting with number one (1) probe as indicated in Figure 3-2. All of the probes are connected via a shielded wiring harness to either a nine pin cannon plug connector or a junction box (See Figures 3-5 and 3-6). The junction box or cannon plug connector facilitates a means of averaging the eight (8) probes. The averaging from either configuration is accomplished electrically at an averaging block located on the left side of the engine. The averaging block also provides the necessary interface connections for the airframe EGT system.

B. Mechanical design features of the EGT system provides for individual removal and replacement of the probes or harness on an installed engine.

3-6. SYSTEM CHECK PROCEDURES

A. There are two (2) procedures utilized in checking the EGT system.

B. Check Procedure I

Equipment required: Simpson 260 or equivalent and a source of heat.

1) Disconnect airframe EGT system at the engine averaging block. Reference Figure

2) Remove junction box cover and bus bar plate. Connect the Simpson meter across the AL (negative, larger stud), and number one (1) CR (positive, smaller stud), terminal (See Figure

3) Carefully apply heat to the number one (1) probe and observe for a deflection on the meter.

NOTE: If the meter reads down scale, switch the meter leads.

EGT SYSTEM SCHEMATIC

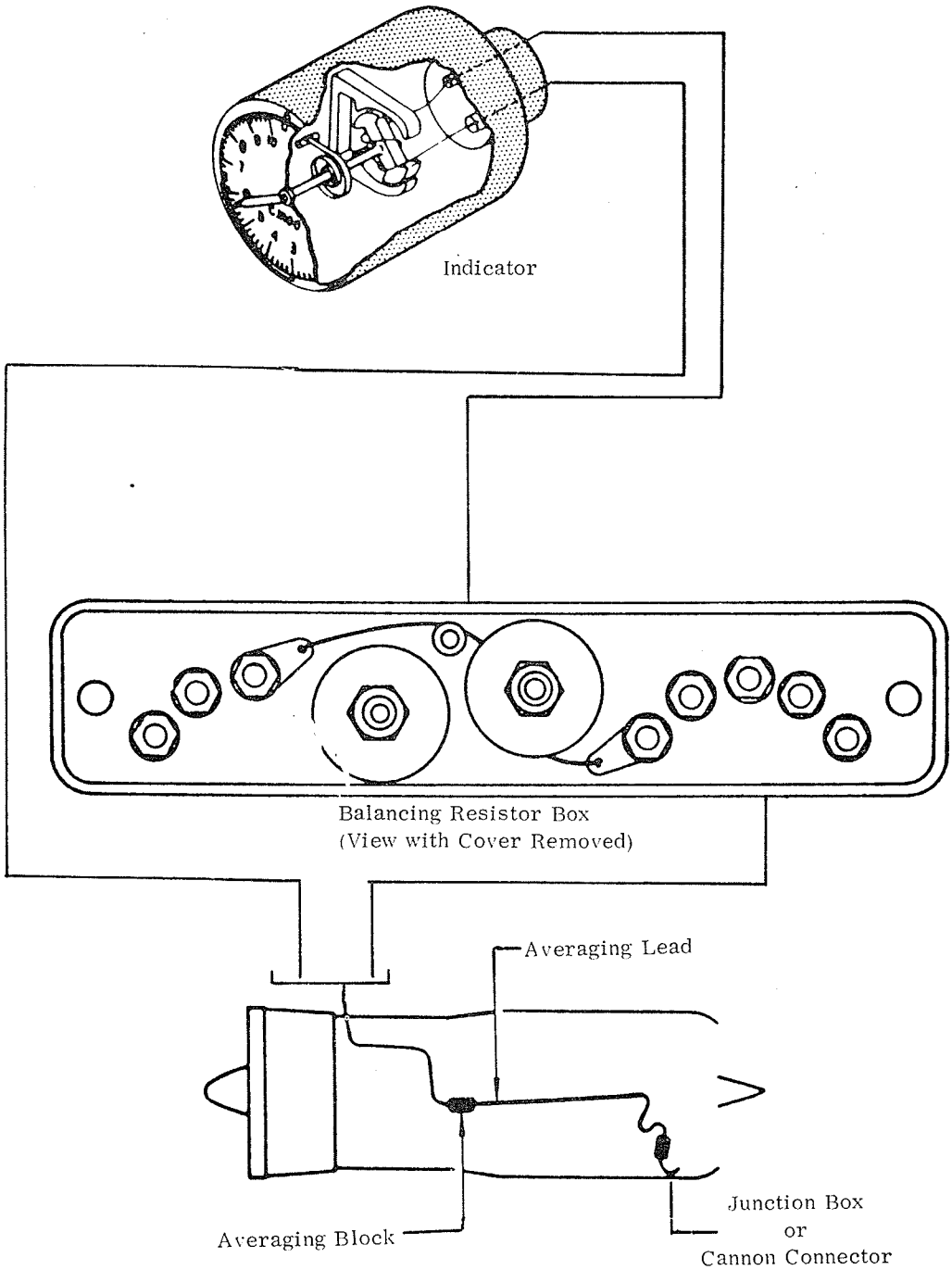

Figure 3-5

THERMOCOUPLE CABLE

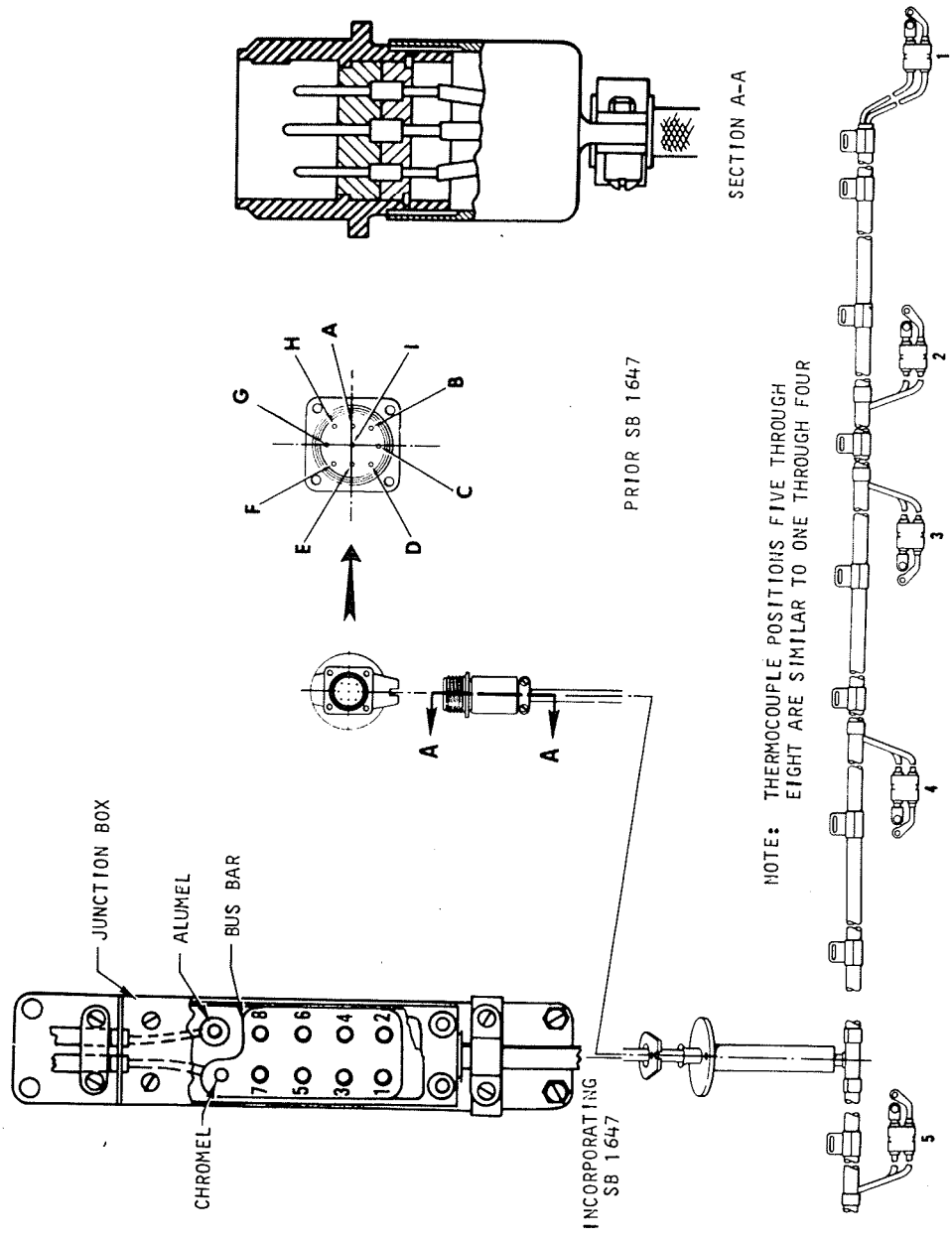

Figure 3-6

4) Check each probe in the same manner. Reference Figure

5) If no deflection on the meter is obtained, either the probe or wiring is open or has a high resistance and is inoperative.

6) Let suspect Thermocouple probe cool. Check probe and harness at junction box for continuity and resistance.

NOTE: Resistance for each circuit should be 1.95 to 2.35 ohms at 68°F.

7) Disconnect leads from suspect thermocouple probe. Check probe for continuity and resistance.

8) Check harness and EGT leads for continuity and resistance.

NOTE: The above procedure also applies to the cannon plug connector configuration, but an adapter will be necessary to allow proper connection of the equipment.

3-7. EXHAUST GAS TEMPERATURE SYSTEM FAULT ISOLATION TABLE

A. EGT System Inoperative

Possible Causes	Isolation Procedure	Corrective Action
1) Defective Indicator	Interchange indicator connectors	Replace indicator and check system calibration.
2) Open in system wiring or a high resistance	Remove indicator and disconnect thermocouple leads from indicator. Check between thermocouple leads for proper ohmage value. NOTE: Refer to airframe manual for correct ohmage value. If reading is higher than airframe specifications check the wiring from cockpit to the balance resistor. Check the balance resistor and the wiring to the engine averaging block. (See Figure 3-5 and 3-7). for averaging block location. Check the resistance across the engine averaging block. This reading should be approximately 2. ohms. (See Figure 3-7). Check the averaging leads from the averaging block to the junction box connection. (See Figure 3-5).	

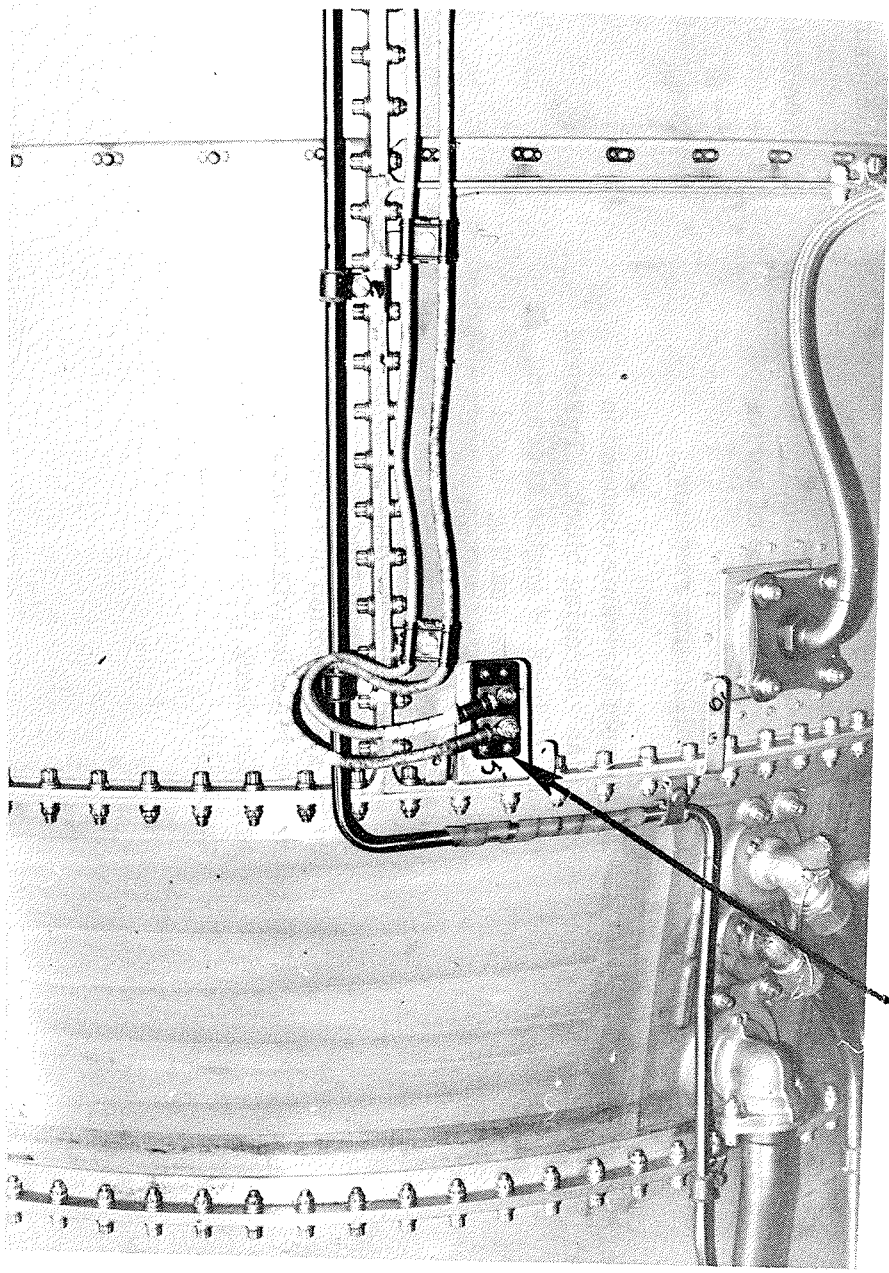

EGT AIRFRAME INTERFACE CONNECTION

Figure 3-7

B. EGT Indicator Reads Low in Comparison to EPR N_1 and N_2

Possible Causes	Isolation Procedure	Corrective Action
1) Defective Indicator	Perform check (1) under EGT System Inoperative	Replace indicator
2) High resistance in system wiring or connections	Check all system connections for security and presence of corrosion.	Tighten and clean as required
	Check calibrating resistor	Replace and recalibrate
3) Thermocouple leads open	Disconnect airframe connection to engine averaging block. Perform ohmeter check of engine averaging system. Above reading should be approximately 2 ohms. (See Figure 3-5 and 3-7).	
	Disconnect cannon plug connection or remove junction box cover, and perform individual probe ohmeter check (See Figure 3-8, 3-9 and 3-10).	

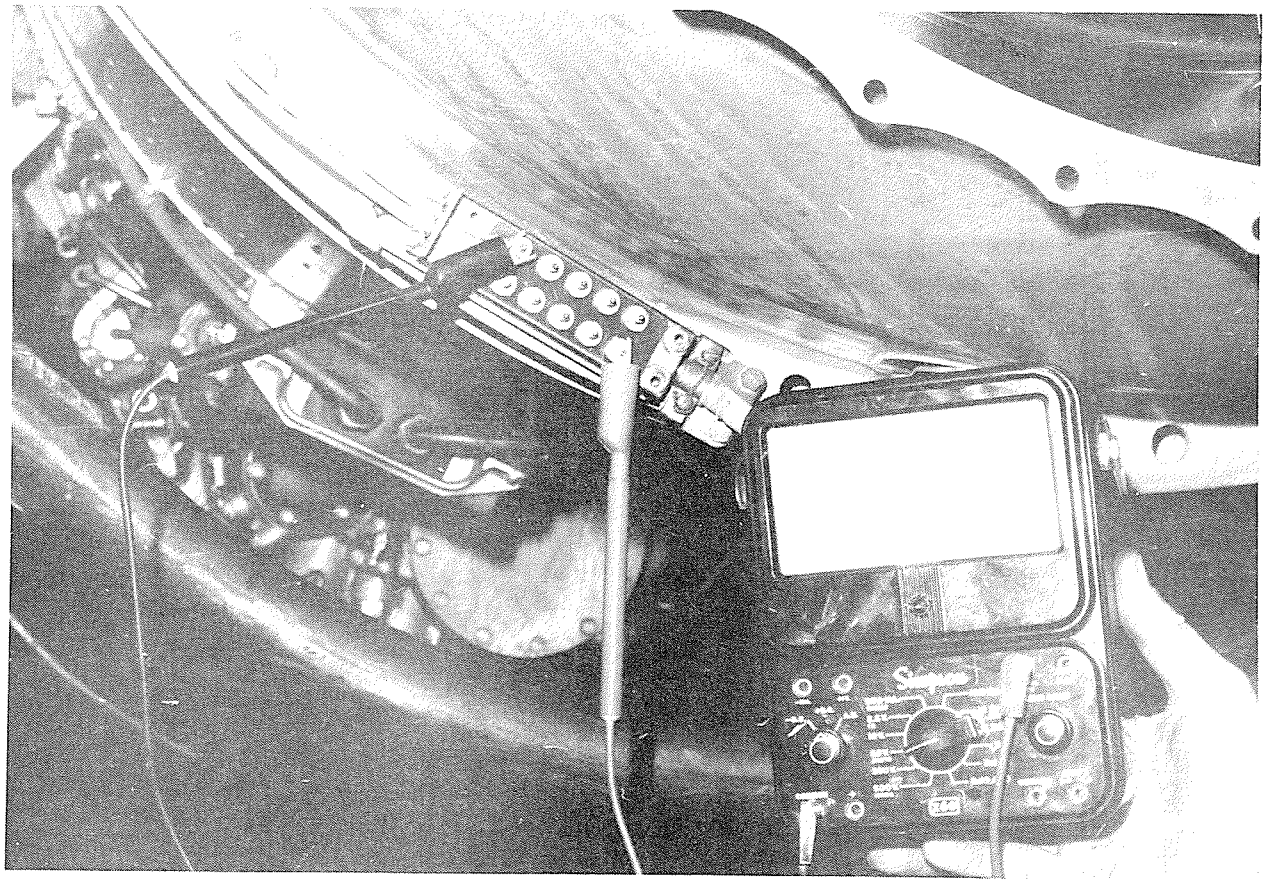

EGT Probe Evaluation
Adapter

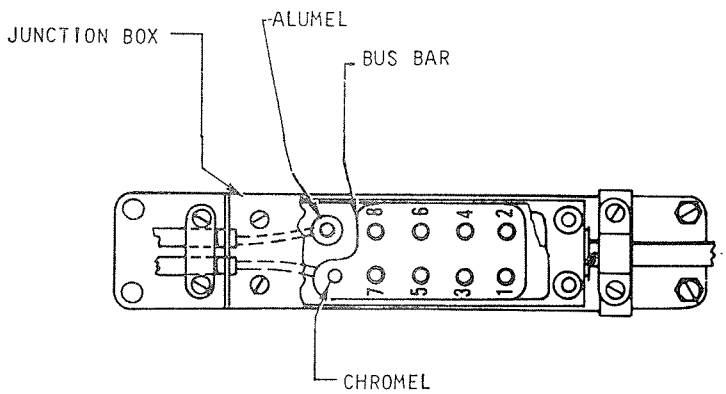

Junction Box

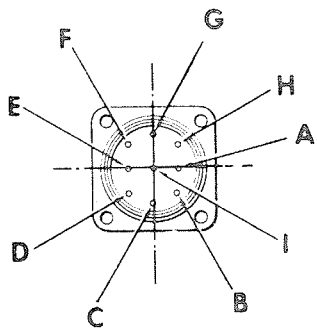

Cannon Connector

Figure 3-8

C. EGT Reads High in Comparison to EPR N_1 and N_2

Possible Causes	Isolation Procedure	Corrective Action
1) Defective Indicator	Perform check (1) under EGT System Inoperative	Replace indicator
2) Calibrating resistor shorted	Remove indicator and disconnect leads from indicator. Check between thermocouple leads for proper ohmage value. If less than value listed in airframe manual check balancing resistor.	Replace and recalibrate system.
3) Thermocouple leads open	Disconnect thermocouple leads at averaging block. (See Figure 3-7). Disconnect cannon plug connector or junction box cover and check individual probes for proper ohmage reading (See Figures 3-8, 3-9 and 3-10).	

JUNCTION BOX AVERAGING CONNECTION

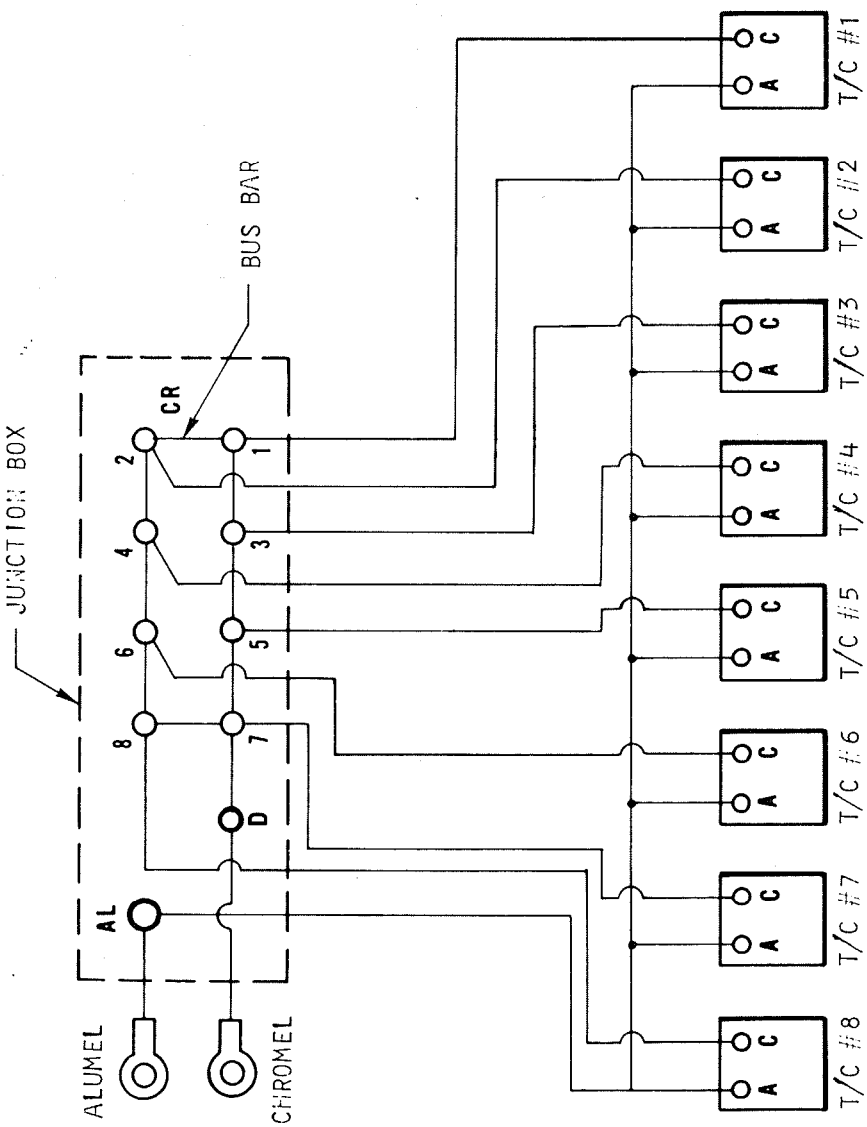

Figure 3-9

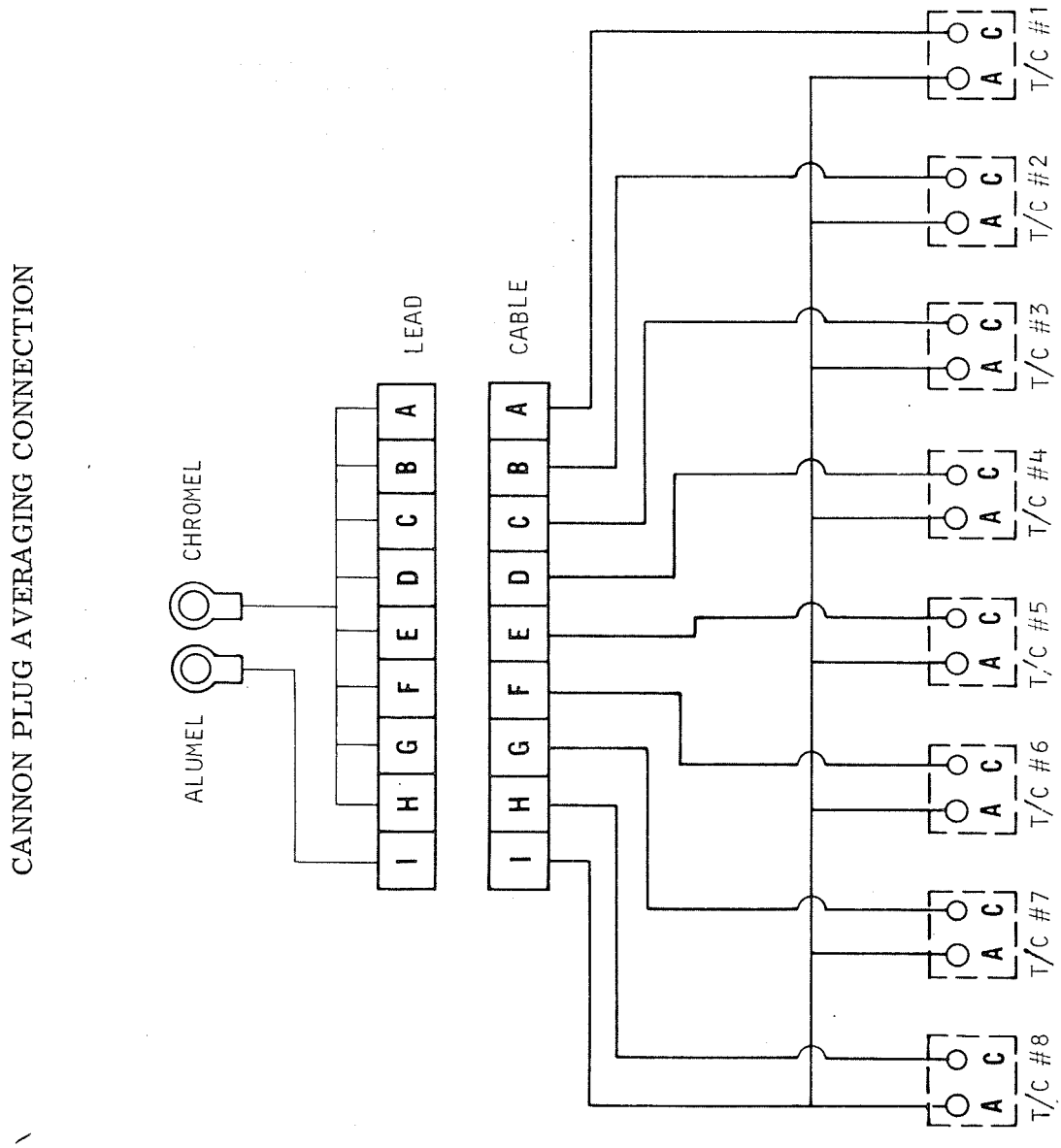
CANNON PLUG AVERAGING CONNECTION
ALUMEL
CHROMEL
LEAD
CABLE
I H G F E D C B A
I H G F E D C B A
T/C #1
T/C #2
T/C #3
T/C #4
T/C #5
T/C #6
T/C #7
T/C #8
A C

Figure 3-10

SECTION IV

FUEL SYSTEM

FUEL CONTROL

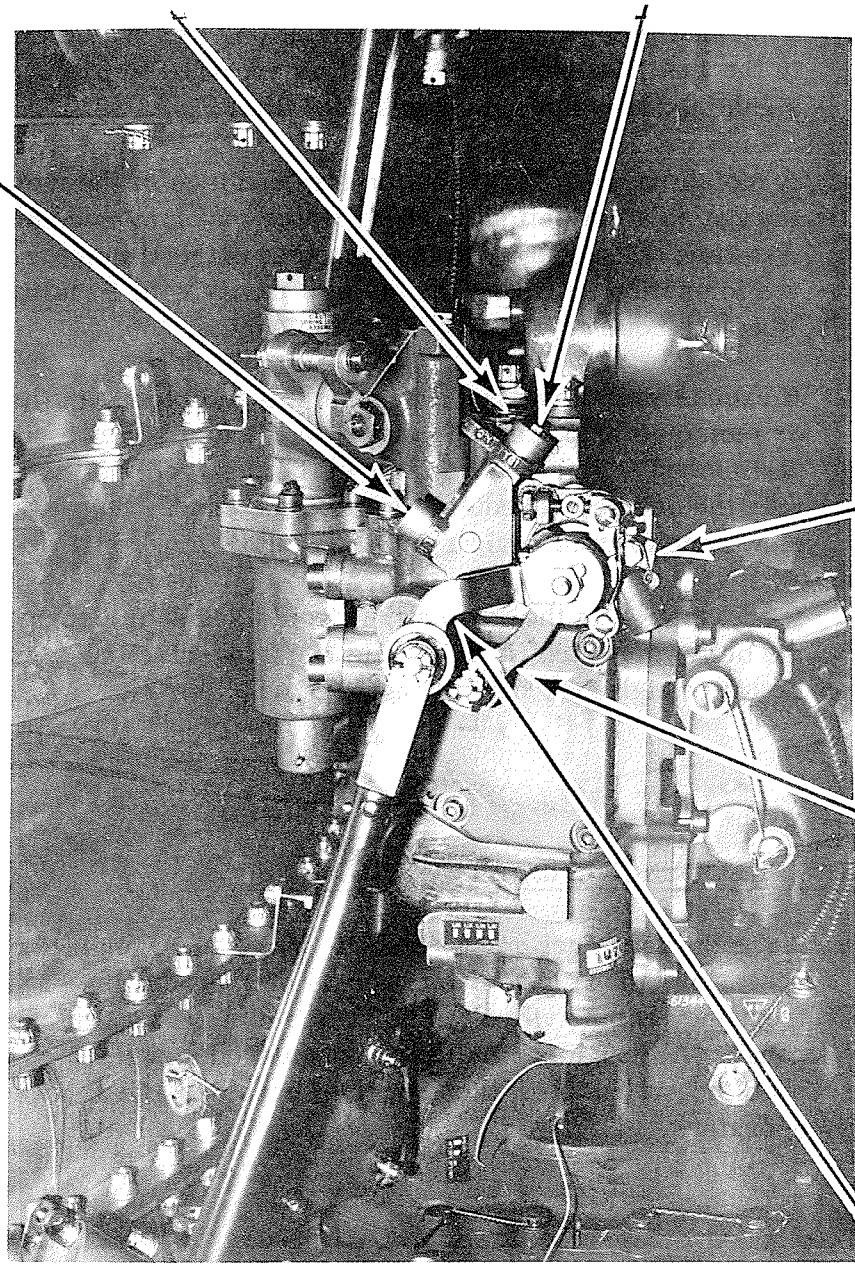

Figure 4-4A

B. A PS4 signal is extracted from the diffuser case or combustion chamber area, depending on the JT8D model. This signal is then sent to the fuel control through a stainless steel line where it displaces the PS4 bellows and adjusts metered fuel flow.

C. A means to prevent water accumulation, and possible ice formation in the Ps4 line and bellows must be provided to prevent an erroneous signal and therefore improper fuel flows.

D. A moisture trap located on the forward face of the fuel control serves as a collection point for water that may accumulate in the Ps4 line. The Ps4 bellows is protected from moisture and possible ice formation by filling the bellows cavity with Versilube F-50 when the control is installed on the engine.

E. If excess moisture should accumulate and freeze in the Ps4 line or moisture trap, the Ps4 signal to the fuel control will be diminished. This could result in the metered fuel being less than the desired schedule. In extreme cases, hung starts or slow acceleration could result.

F. Ice formation in the Ps4 bellows could result in expansion of the bellows, which in turn could cause overfueling. This could result in high EGT during engine start.

4-5. LOW FREQUENCY VIBRATION (RUMBLE)

A. Since the introduction of reduced smoke JT8D engines into commercial operation, there have been reports of sporadic instances of low frequency engine vibration or "rumble" in the 70-80 percent N2 speed range. Although normally not considered a serious operational problem, it has been the source of considerable annoyance to some operators.

B. Low frequency vibration, or "rumble", occurs during steady state engine operation when the fuel flow is between 2,000 and 3,000 p.p.h. It results in an axial engine vibration at a frequency level of 10 to 20 cycles per second (CPS), but due to its direction and frequency, it is usually not evident on aircraft A.V.M. equipment. However, it has on occasion been known to cause severe shaking of the aircraft when engine operation was stabilized in the critical range. This problem should not be confused with an off-idle stall condition which may occur during engine acceleration, or with instabilities at other power settings which are of lower frequency and are, therefore, apparent on engine speed or fuel flow instrumentation.

C. The "rumble" problem became apparent with the incorporation of smoke reduction components. The reason appears to be that the reduced primary flow area of the smoke reduction fuel nozzles increases the fuel system back pressure. The higher fuel system back pressure in turn causes an increased pressure drop across the control pressure regulating valve. This results in an unstable system which interacts with the pressurizing and dump valve when the servo flow gain or the dampening clearance are not within required limits.

D. A temporary cure for this problem is a reduction of the pressurizing and dump valve set point, which will reduce the fuel system back pressure level and, therefore, the flow gain of the fuel control pressure regulation valve which restores system stability. However, this would not cure the existing problem with the fuel control, but will decrease the off idle stall margin or decrease the rate of acceleration.

E. The recommended procedure is to incorporate, Hamilton Standard Service Bulletin 89, which reduces the servo valve dampening clearance and establishes a desired flow gain value.

4-6. FAULT ISOLATION TABLE

Trouble Indication	Probable Unit at Fault	Specific Malfunction	Isolation Checks	Corrective Action
1. No fuel flow when fuel shut-off lever is moved to "ON" position.	1. Fuel Shut-off lever	1. Rigged improperly	1. Check for full travel at fuel control unit. It must contact full open stop.	1. Re-rig fuel shut-off lever linkage.
	2. Fuel Pump	2. Low or no primary stage output pressure.	2. Check for proper primary stage discharge pressure. 150 psig minimum with shut-off lever in "ON" position.	2. Remove and replace fuel pump (Note: due to Piggy-back pump and control arrangement these components are changed together.)
	3. Fuel Control	3. Minimum Pressure and Shut-off Valve in FCU not opening.	3. The preceding check of the fuel pump will determine if fuel control or fuel pump is at fault.	3. Remove and replace Fuel Control (See note above).

Trouble Indication	Probable Unit at Fault	Specific Malfunction	Isolation Checks	Corrective Action
2. Fuel flow is indicated but no EGT rise.	1. P&D Valve	1. Dump valve open to "drain".	1. Check for continuous draining of fuel while motoring the engine. No draining should occur. (If P&D valve drain has been deactivated per S.B. disregard this check)	1. Remove and replace the P&D valve.
	2. Also refer to ignition system troubleshooting procedure (See Section V)			
3. Engine starts normally but does not accelerate to "Idle" (Hung Start)	1. Air entrapped in fuel control unit. Note: Entrapped air in the FCU may limit N2 RPM at any value, not necessarily below idle, depending on the amount of entrapped air.	1. Entrapped air preventing proper fuel control servo response.	1. Advance and retard throttle slowly through entire travel, idle to maximum. If response improves, entrapped air is likely.	1. Continue accel and decel until response is normal for at least 5 minutes to insure that all air is bled from the system.

Trouble Indication	Probable Unit at Fault	Specific Malfunction	Isolation Checks	Corrective Action
	2. Fuel Control Unit (No throttle response).	2. Starting fuel schedule too low. (Failure to respond to the Ps4 signal is one of the most common faults).	2. Check Ps4 sensing system. a. If internal icing is a possibility apply external heat.	2. If external heat solves the problem, drain the Ps4 sensing section. If control responds to simulated Ps4 signal, check Ps4 sense line, See Item 3. If control doesn't repond, remove and replace FCU.
	3. Ps4 sense line to FCU.	3. Leaking or obstructed Ps4 sensing line.	3. Check all fittings for security and visually check line for cracks. Check line and moisture trap for ice or other foreign matter. Check Ps4 chamber in FCU for proper service of silicone oil, making certain no water is in the chambers.	3. Tighten or rereplace line. Blow out line with dry air pressure source attached to fuel control end of line. If chamber requires servicing use Versilube F50.

Trouble Indication	Probable Unit at Fault	Specific Malfunction	Isolation Checks	Corrective Action
4. Engine starts but exhaust gas temp. exceeds allowable limits (Hot Start)	1. Fuel Control Unit	1. Starting fuel schedule high.	1. Does starting fuel flow exceed maximum limits specified in tech manuals?	1. If so, remove and replace fuel control unit.
	2. Pressurizing and Dump Valve	2. Pressurizing valve stuck open thereby effecting pressure and atomization at the fuel nozzles.	2. Attach direct reading pressure gage to secondary pressure tap on P&D valve. During start, the pressurizing valve should be closed and the gage reading should be Ps4 value.	2. If pressure is higher than Ps4, remove and replace P&D valve.
5. Unable to attain T.O. Power	1. Fuel Pump	1. Impeller Failure	1. See fuel pump troubleshooting procedures.	1. Remove and replace as necessary.
	2. Fuel Supply Line	2. Flex fuel line collapsed.	2. See aircraft maintenance manual for troubleshooting procedures.	2. Remove and replace.

Trouble Indication	Probable Unit at Fault	Specific Malfunction	Isolation Checks	Corrective Action
6. Throttle Alignment	1. Rigging	1. Improper Rigging (Engine to Aircraft)	1. See Aircraft Maintenance Manual for troubleshooting procedures.	
	2. Air Entrapment in fuel control.	2. Entrapped air preventing proper fuel control servo responses.	2. See engine starting troubleshooting procedures.	
	3. Fuel Control	3. Fuel Control trimmed improperly.	*3. See Section VI in this handbook for proper trimming procedures.	3. CAUTION: Trimming should be accomplished in accordance with the applicable aircraft maintenance manual.
	4. Fuel Restriction	4. See applicable Aircraft Maintenance Manual for troubleshooting procedures.		

*NOTE: SEE APPLICABLE AIRCRAFT MAINTENANCE MANUAL FOR CURRENT TRIMMING PROCEDURES.

Trouble Indication	Probable Unit at Fault	Specific Malfunction	Isolation Checks	Corrective Action
7. Flame out when applying power for take-off.	1. Fuel Pump	1. Fuel pump shaft sheared.	1. Refer to trouble indication number 1 for pump troubleshooting procedures.	1. Remove and replace fuel pump.
	2. Fuel Control	2. Schedule shift (rich)	2. Refer to trouble indication number 1 for control troubleshooting procedures.	1. Remove and replace fuel control.
8. Flame out in flight.	1. Loss of burner pressure.	1. Leaking Ps4 sensing system.	1. Refer to trouble indication number 3 for control troubleshooting procedures.	1. Replace or repair as necessary.
	2. Fuel Pump	2. Failed fuel pump	2. Refer to trouble indication number 1 for pump troubleshooting procedures.	2. Remove and replace fuel pump.

Trouble Indication	Probable Unit at Fault	Specific Malfunction	Isolation Checks	Corrective Action
9. Compressor stall (acceleration or deceleration)	1. Fuel Control	1. Schedule Shift	1. Refer to trouble indication number 1 for control troubleshooting procedures.	1. Remove and replace fuel control.
10. Engine fuel temperature low (air/fuel heater on).	1. Air/fuel heater defective.	1. Clogged air/fuel heater case	1. Refer to applicable maintenance manual for troubleshooting procedure.	1. Remove and replace air/fuel heater.
	2. Fuel de-icing air shut-off valve.	2. Shut-off valve failed closed.	2. Check position of air shut-off valve indicator.	2. Remove and replace shut-off valve.
	3. Indicating system	3. Sensor or wiring faulty.	3. Refer to Aircraft Maintenance Manual for troubleshooting and wiring diagrams.	3. Remove and replace defective indicating system component.

CAUTION:
Extreme care must be exercised during installation of the fuel pump and control. This is to ensure positive spline engagement and to avoid damage to the fuel control drive shaft bearing. If engine is started with control misassembled, engine will continue to accelerate with no power lever response. This malfunction results from lack of rotation of control drive causing flow regulation on zero speed schedule only. In event this problem should occur, the control must be removed for drive gear bearing inspection.

SECTION V

IGNITION SYSTEM

SECTION V

IGNITION SYSTEM

5-1. GENERAL

There are two ignition systems offered for the JT8D engine. The customer may opt for either the Bendix E.C.D.* or Simmonds Precision, Engine Systems Division.

5-2. SIMMONDS PRECISION SYSTEM DESCRIPTION & OPERATION

A. This system consists of two independent 20 Joule, AC powered intermittent duty, capacitor discharger circuits (Twin-Pac). Each circuit is contained in a completely separate exciter housing with individual power input and high tension output connections (see Figure 5-1). These outputs are electrically connected through the shielded high tension cables to individual igniter plugs.

B. Each 20 Joule circuit can be replaced without removing the components of the other circuit. Each circuit converts the input AC power into high voltage DC for storage as a charge on the tank capacitor. This stored energy is delivered to the igniter plug at the specified spark rate by means of a high tension cable. Provisions in the exciter circuitry enable a high voltage pulse to be delivered to the igniter to provide positive breakdown of the igniter gap under all conditions. The wiring diagram schematic (see Figure 5-2), depicts the exciter circuitry.

5-3. SIMMONDS PRECISION SYSTEM SPECIFICATIONS

Input Connector Pins	-	B Positive, A Ground
Input Voltage	-	115 VAC, 400 CPS
Maximum Power Input	-	2.5 Amperes RMS Average at 115 VAC, 400 CPS
Spark Repetition Rate	-	0.5 Per Second
Output (High Frequency Ionization Voltage)	-	22-26 KV

*BENDIX ELECTRICAL COMPONENTS DIVISION

SIMMONDS PRECISION
EXCITER BOX

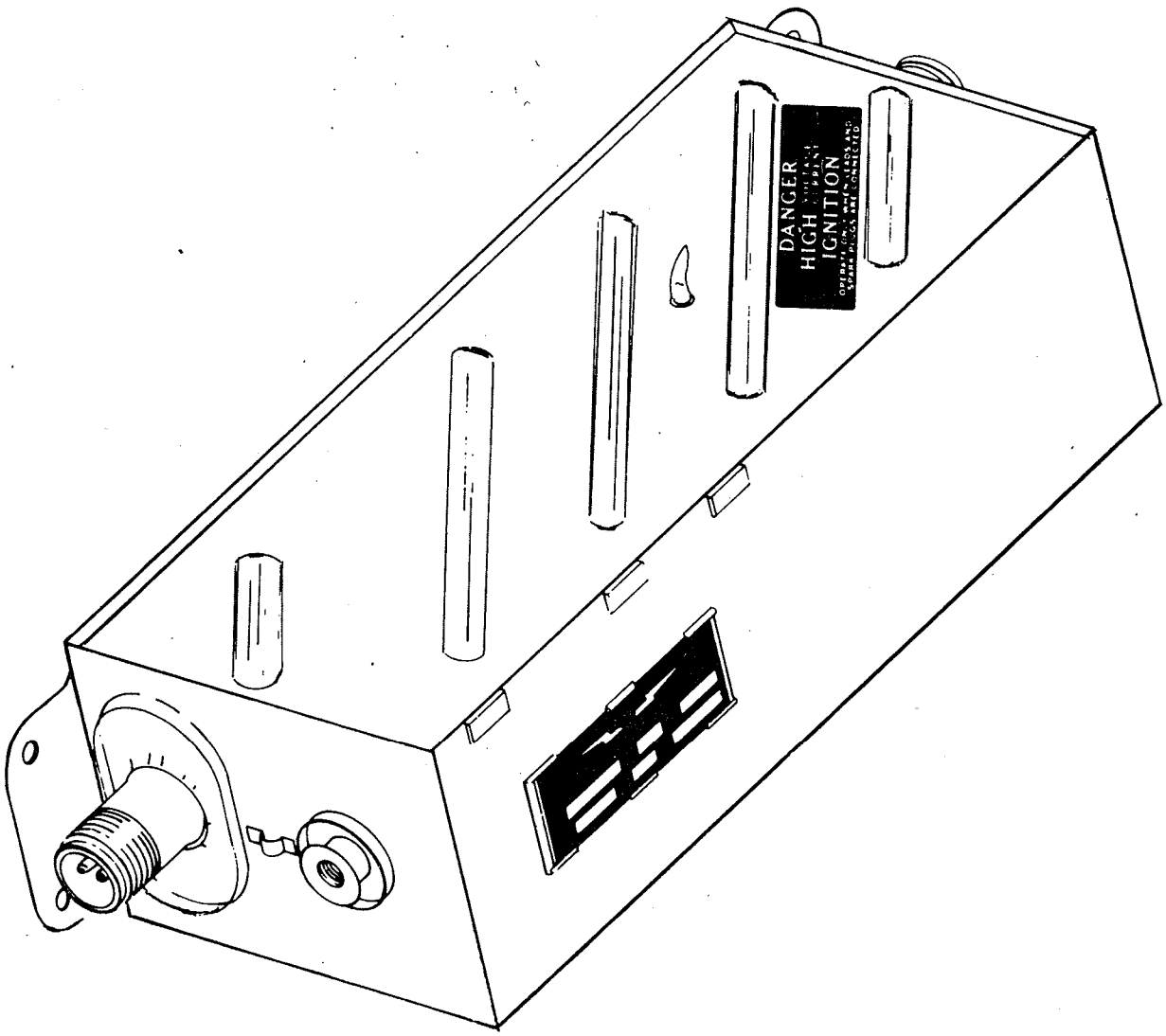

Figure 5-1

SIMMONDS PRECISION
IGNITION EXCITER BOX SCHEMATIC

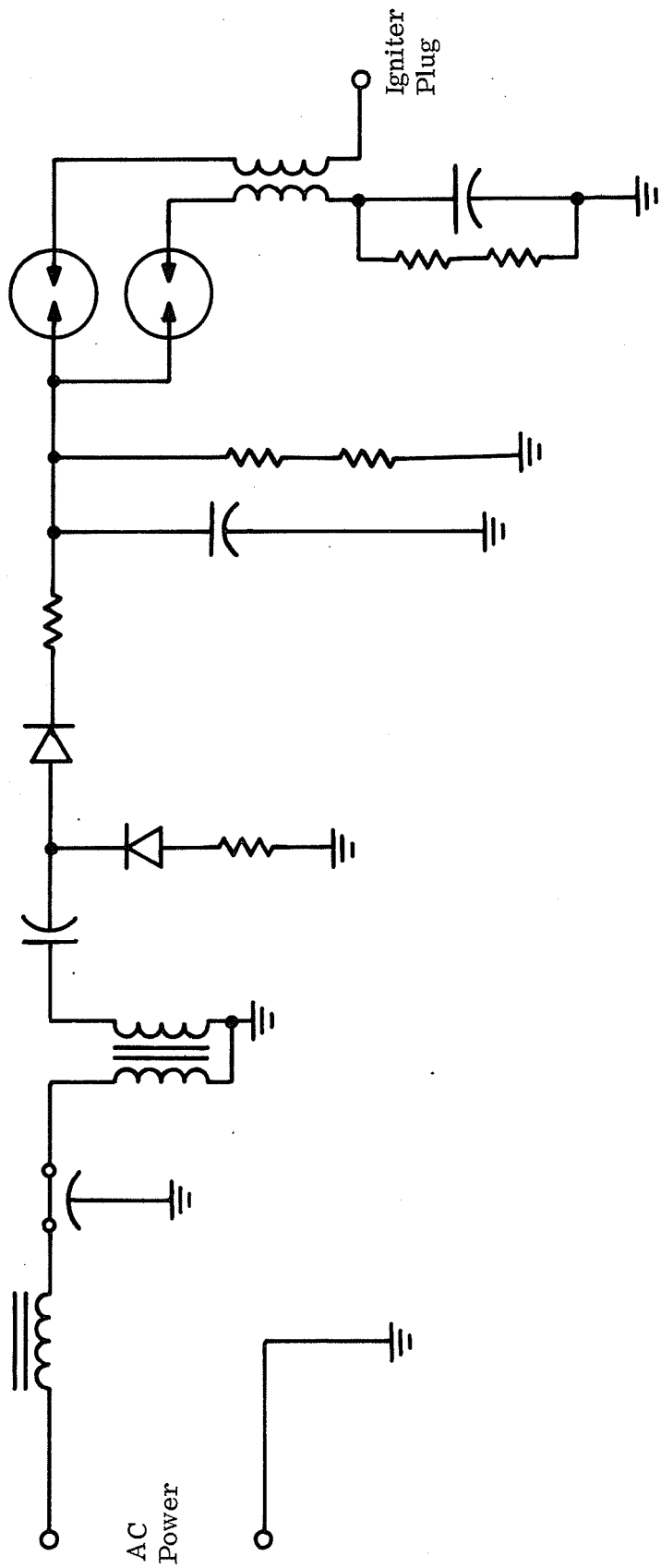

Figure 5-2

Accumulated Energy	-	20 Joules
Duty Cycle	-	1 Minute On, 10 Minutes Off
Operating Altitude	-	Sea Level to 70,000 ft.
Temperature	-	Continuous Soak at +300°F Operation at +270°F

5-4. BENDIX E.C.D. SYSTEM DESCRIPTION & OPERATION

A. The ignition exciter is a capacitor discharge system designed to provide ignition for the JT8D engine. This ignition exciter serves the dual purpose of providing intermittent duty starting ignition and continuous duty ignition which is used, as required, after starting. Two different input voltages are required for the exciter. The intermittent duty starting circuit requires an input of 24 VDC while the continuous duty circuit requires an input of 115 VAC, 400 cycles.

B. The intermittent duty starting circuit discharges through both outlets firing two igniter plugs. The continuous duty circuit discharges only through the outlet marked CONTINUOUS DUTY OUTLET, firing one igniter plug. Spark gaps prevent current from flowing in one circuit when the other circuit is operating.

C. The ignition exciter is contained in one compact housing, with one input power connection and two output connections (see Figure 5-3). The wiring diagram schematic (see Figure 5-4), depicts the exciter circuitry.

BENDIX ECD
EXCITER BOX

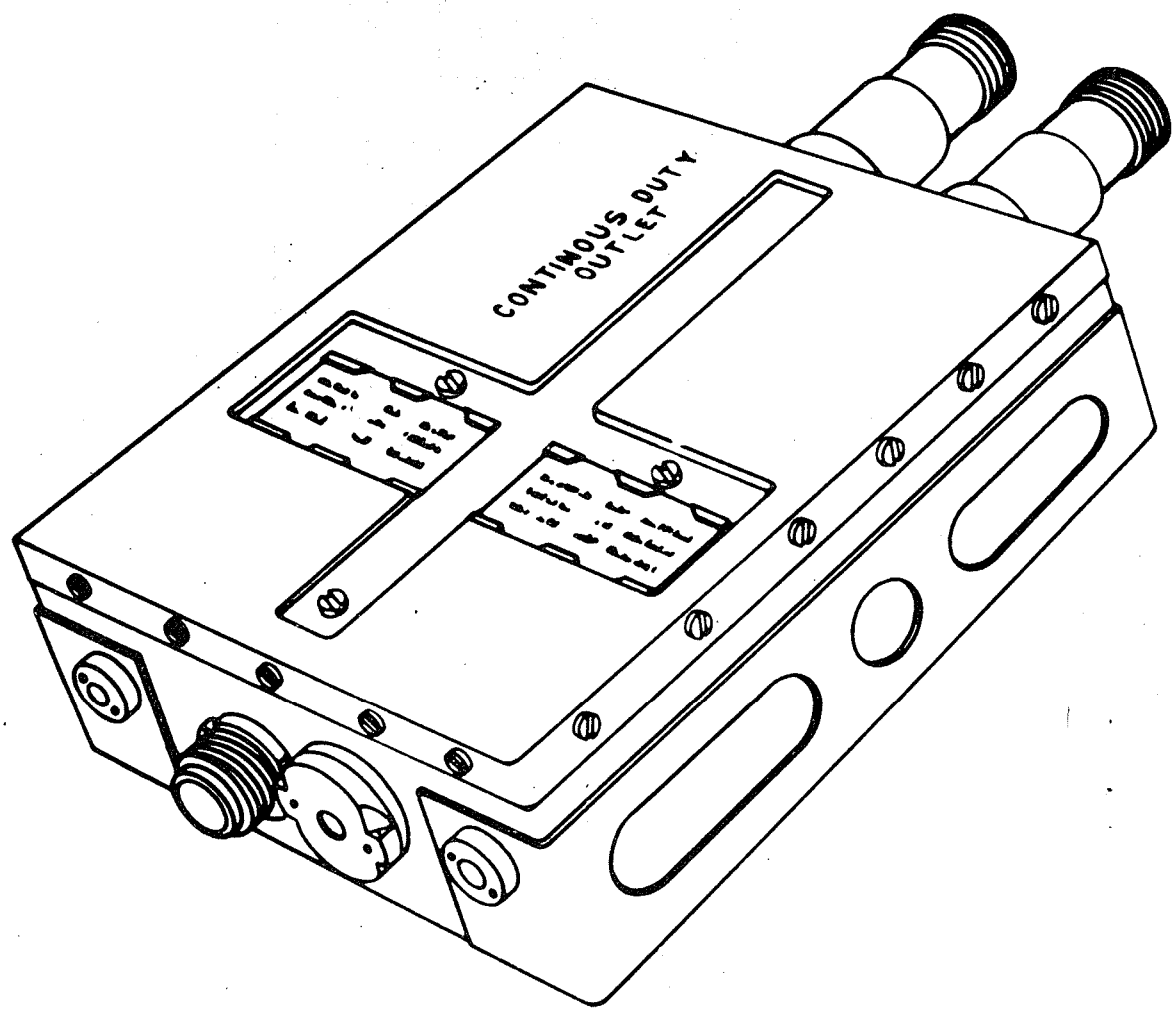

Figure 5-3

BENDIX ECD SOLID STATE IGNITION SCHEMATIC

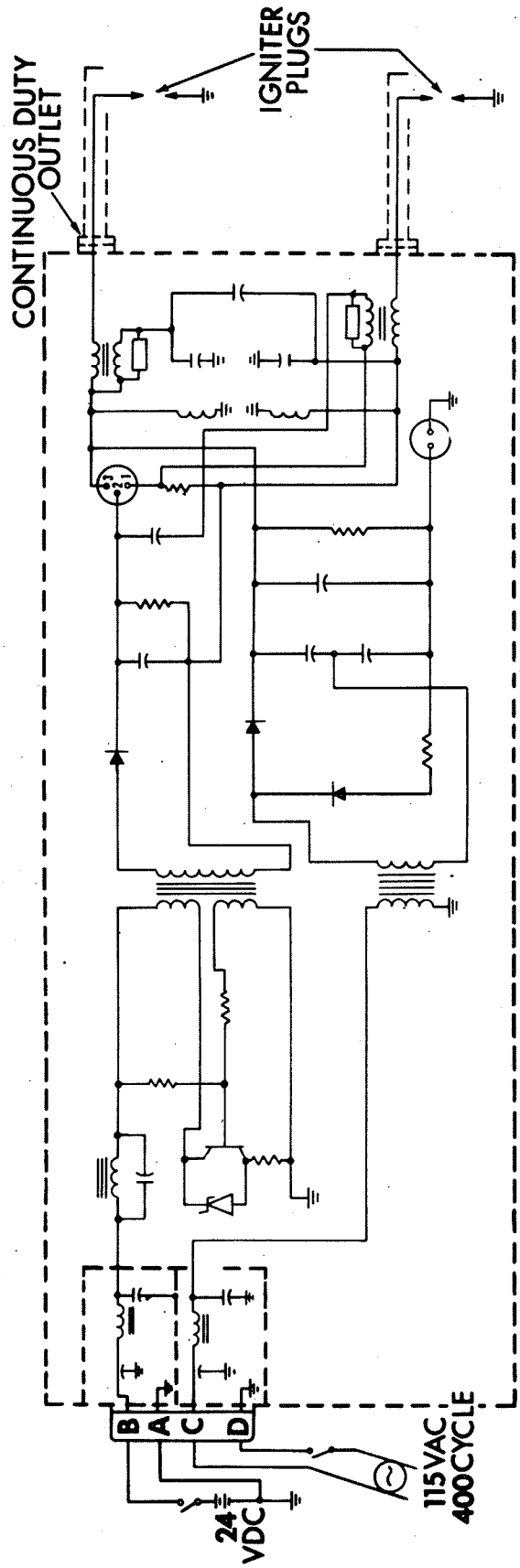

Figure 5-4

5-5. BENDIX E.C.D. SYSTEM SPECIFICATIONS

	Intermittent Duty Circuit	Continuous Duty Circuit
Input Connector Pins	"B" Positive, "A" Ground	"C" Positive, "D" Ground
Input Voltage	14 to 29V DC	90 to 124V AC 350 to 440 CPS
Input Current	5.0 Amps DC Max.	2.5 Amps RMS Max.
Duty Cycle	Intermittent	Continuous
Number of Plugs Fired	2	1
Stored Energy	20 Joules	4 Joules
Spark Rate	0.5 S/S Minimum	0.7 S/S Minimum
Ionizing Voltage	22-26 KV	22-26 KV
Ambient Temperature	$-65^{o}F$ to $275^{o}F$	-
Operating Altitude	70,000 ft. Max.	-

5-6. HIGH TENSION DISTRIBUTION - DESCRIPTION & OPERATION

A. General

In both the Bendix E.C.D. and Simmonds Systems, the high tension distribution system is similar. This system delivers high voltage from the ignition exciter to the combustion chambers by means of high tension leads and igniter plugs.

B. High Tension Leads

The igniter plug lead assemblies are installed between the ignition exciter and the igniter plugs. The igniter plug lead assemblies transfer high frequency, high voltage from the ignition exciter to the igniter plugs.

C. Igniter Plugs

1) Two igniter plugs are mounted on the lower front of the combustion chamber outer case. One projects into the number four combustion chamber and the other projects into the number seven combustion chamber.

2) The igniter plug provides the gap across which the electrical spark passes to ignite the fuel-air mixture. The igniter plug gap is ionized and becomes conductive by the surge of very high voltage from the high frequency coils of the ignition exciter. The capacitor then discharges its accumulated energy across the ionized igniter plug gap. This results in a capacitive spark of very high energy, capable of vaporizing globules of fuel and overcoming carbon deposits.

5-7. IGNITION SYSTEM FAULT ISOLATION PROCEDURES

WARNING: Because the voltage at the igniter plugs is dangerously high, the ignition switch must be in "OFF" position, and the ignition system inoperative for six minutes before the removal of ignition system components. For additional protection against electrical shock hazard, after detaching the igniter plug coupling nuts touch the connector contact to the igniter plug body shield. This is to ensure the complete dissipation of energy. Consult P&WA Maintenance Manual for further safety precautions.

A. High Tension Lead Checks

TASK	PROCEDURE	RESULTS
1. Continuity Check	Check igniter plug lead assemblies for continuity using ohmmeter.	There must be continuity from terminal to terminal. If not, replace lead.
2. Leakage Resistance Check	Using high voltage DC tester, check leakage resistance of lead assemblies. Apply 15K VDC between either terminal and shielding until stable reading is obtained.	Leakage resistance shall be 500 megohms minimum. If not, replace lead.

B. Igniter Plug Checks

CAUTION: Prior to the performance of any igniter plug checks, the clear engine procedure must be complied with as outlined in the testing section of the P&WA Maintenance Manual.

TASK	PROCEDURE	RESULTS
1. Audible Check	Place ignition switch "ON."	Listen for plug firing within engine.
2. Visual Check	Remove igniter plugs from engine. With plugs still connected to high	Check the consistency and intensity of the plug spark rate.

TASK	PROCEDURE	RESULTS
	tension leads outside engine, place ignition switch "ON."	

C. 20-4 Joule Ignition Exciter Checks

NOTE: Ignition exciter may be checked for electrical operation while mounted on the airframe with 11-4900 jet ignition unit portable tester. Checking of intermittent duty circuit and continuous circuit must be done separately because they are not designed to operate at the same time.

TASK	PROCEDURE	RESULTS
1. Intermittent Duty Circuit Check	1. Connect 11-4900 tester (see Figure 5-5) to suitable DC power supply.	
	2. Attach 11-7435 input adapter (see Figure 5-5) to ignition exciter input connector.	
	3. Place adapter switch in DC position.	
	4. Connect 11-6196 output lead and 11-7435 input adapter (see Figure 5-5) between unit under test and connector on tester.	
	5. Attach 11-6529-1 output lead assembly (see Figure 5-5) between continuous duty outlet of exciter and H. T. connector on tester.	
	6. Install 11-8789 shorting plug (see Figure 5-5) on other output connector of exciter.	

TASK	PROCEDURE	RESULTS
	7. Check ignition exciter for input current and spark rate in accordance with values given in Table 5-1.	

CAUTION: Be sure internal power switch (S-3) of tester and 11-7435 adapter switch are both in "DC" position when checking intermittent duty circuit. Severe damage to exciter may result if both switches are not in "DC" position.

WARNING: The output of ignition exciter under test is sufficient to cause dangerous electrical shock. Do not touch any exposed or live portion of ignition exciter or leads during operation.

	8. Remove 11-6529-1, output lead assembly, (see Figure 5-5), from continuous duty outlet of exciter and the output test connector of tester.	
	9. Place output range switch of the tester in "A" position and set compensator at 135 (or 200 for -3 and -4 units).	
	10. Check intermittent duty circuit for output voltage specified in Table 5-1.	Replace exciter unit as required.
2. Continuous Duty Circuit Check	1. Connect 120V 400 cycle AC power supply to AC input connector on 11-4900 tester.	
	2. Attach 11-7435 input adapter (see Figure 5-6) to input connector of ignition exciter.	

TASK	PROCEDURE	RESULTS
	3. Place adapter switch to "AC" position (see Figure 5-6).	
	4. Connect 11-6196 output lead and ~~11~~-7435 input adapter between unit under test and connector on tester. (See Figure 5-6).	
	5. Attach an 11-6529-1 output lead assembly between the exciter outlet marked continuous duty outlet and the H. T. connector of tester.	
	6. Install 11-8789 shorting plug, (see Figure 5-6), on other output connector of exciter.	
	7. Check exciter for spark rate and input current values in Table 5-2.	
	8. Remove 11-6529-1 output lead from H. T. connector of tester and continuous duty outlet of exciter.	
	9. Connect 11-8784 special output lead (see Figure 5-6), between continuous duty outlet of exciter and output test connector on tester.	

TASK	PROCEDURE	RESULTS
	10. Place output range switch of tester in position B and set compensator at 65.	
	11. Check continuous duty circuit for output voltage specified in Table 5-2.	Replace exciter as required.

NOTE: 4 Joule discharge tube (gap) is designed to be changed on an engine. See JT8D Maintenance Manual for procedures.

CAUTION: Be sure internal power switch (S-3) of the tester is in "400 C" position and 11-7435 adapter switch is in "AC" position. Severe damage to ignition exciter may result if switches are not in these positions.

WARNING: The output of ignition exciter under test is sufficient to cause dangerous electrical shock. Do not touch any exposed or live portion of the ignition exciter or leads during operation.

IGNITION EXCITER SPARK RATE
& INPUT CURRENT TEST

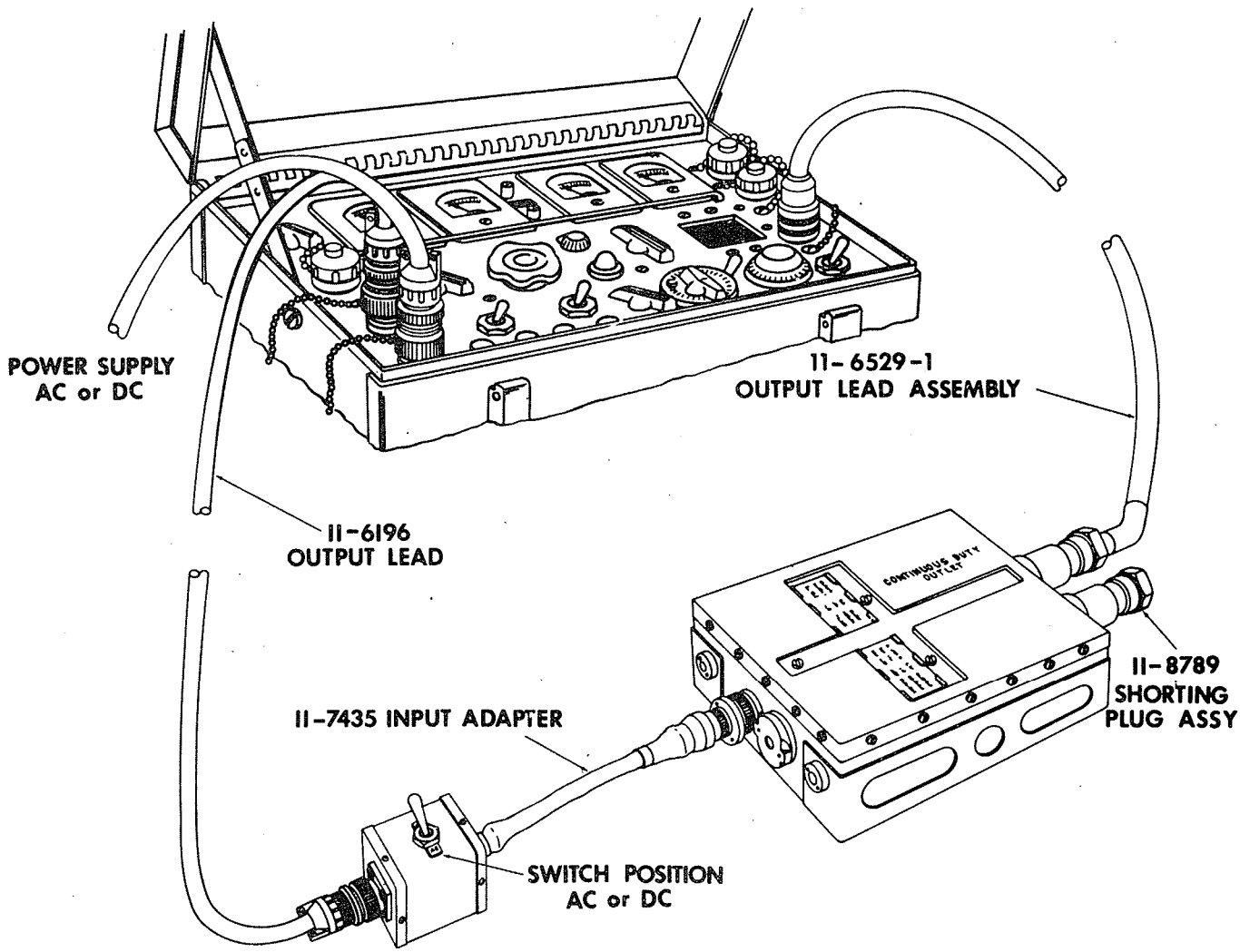

Figure 5-5

IGNITION EXCITER
OUTPUT VOLTAGE TEST

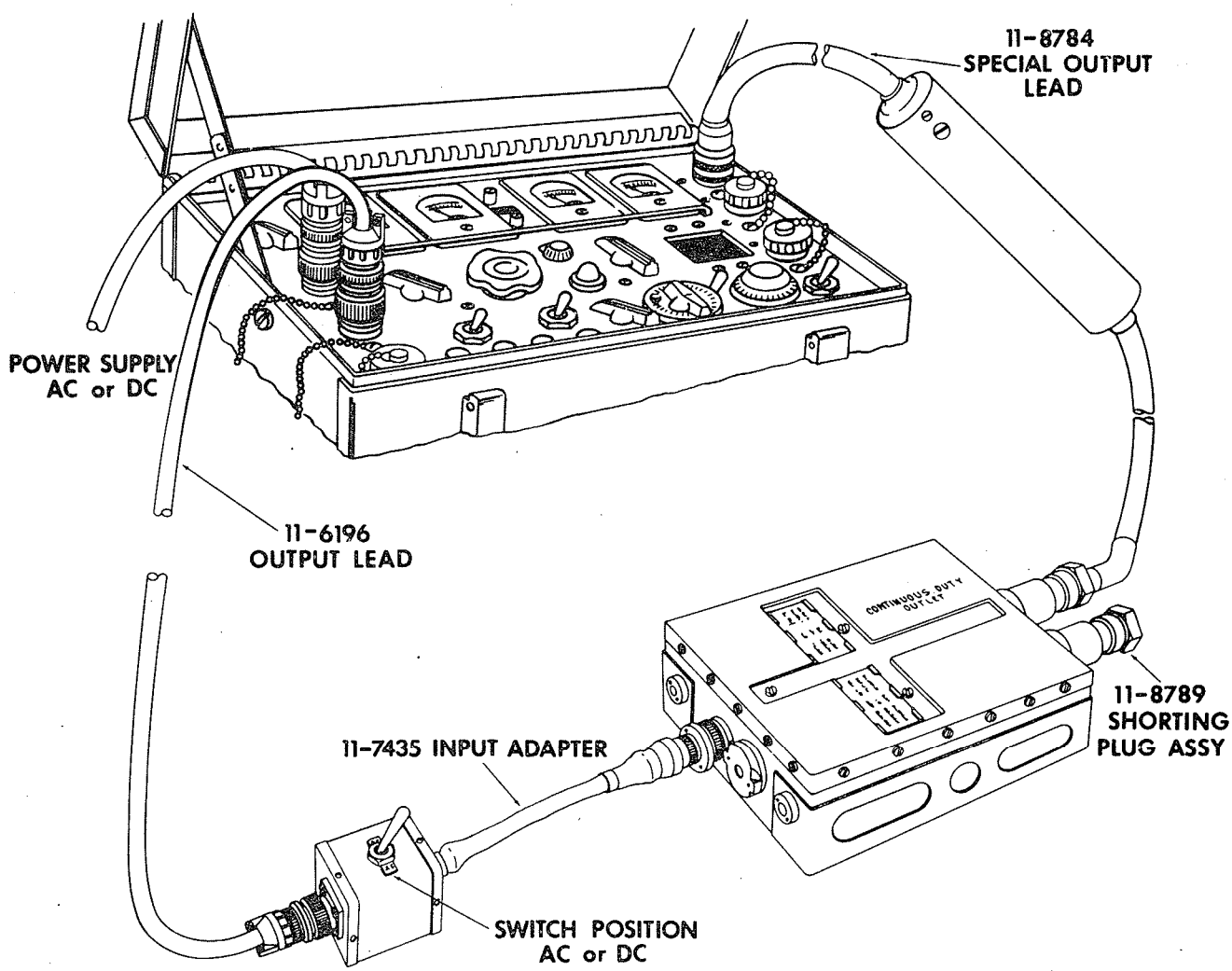

Figure 5-6

EXCITER PART NO.	APPLIED VOLTAGE (VDC)	INPUT CURRENT MAX.	SPARK RATE PER SECOND	SPARK RATE PER MINUTE	OUTPUT VOLTAGE
10-353875-1 Not Incorporating Revision D	14 24 30	5.4 3.8 3.4	0.4-1.1 0.5-1.5 0.5-1.6	24-66 30-90 30-96	2400-3300
10-353875-1 Incorporating Revision D & 10-353875-2	14 24 30	5.2 4.4 4.0	0.4-1.4 0.6-2.0 0.7-2.2	24-84 36-120 42-132	2400-3300
10-353875-3,-4	14 24 30	3.7 4.8 5.1	0.47-1.0 0.90-2.1 1.20-2.1	29-60 54-126 72-126	2600-3400

Test Values for Intermittent Duty Circuit
TABLE 5-1

EXCITER PART NO.	CYCLES PER SECOND	APPLIED VOLTAGE (VAC)	INPUT CURRENT MAX.	SPARK RATE PER SECOND	SPARK RATE PER MINUTE	OUTPUT VOLTAGE
10-353875-1 Not Incorporating Revision D	350 400 440	90 115 124	0.8 0.9 0.9	0.7-2.0 1.1-2.8 1.2-2-9	42-120 66-168 72-174	2850-3650
10-353875-1 Incorporating Revision D & 10-353875-2 -3, -4	350 400 440	90 115 124	0.8 0.9 0.9	0.9-2.3 1.1-3.0 1.1-3.1	54-138 66-180 66-186	3150-3950

Test Values for Continuous Duty Circuit
TABLE 5-2

SECTION VI

FUEL CONTROL TRIMMING

SECTION VI

FUEL CONTROL TRIMMING

6-1. GENERAL

A. During the assembly of a new or overhauled engine, a unique fuel control unit (F.C.U.) is assembled to a unique engine gaspath. Upon completion of the engine assembly, the engine is subjected to acceptance or post overhaul testing to determine if it will produce rated thrust within production or overhaul limits.

B. Before this can be determined, however, the F.C.U. must be properly adjusted so that it will meter the correct fuel flow required by the engine gaspath. This F.C.U. adjustment is called the "Initial Fuel Control Trim." Thus "Trimming" can be defined as the procedure for properly matching the F.C.U. to the requirements of the engine gaspath.

C. Assuming that the engine successfully passes acceptance or post overhaul testing, it is ultimately installed in an operational aircraft. It may be necessary at this time to recheck the F.C.U. trim because "installation effects" could very well effect the match between the F.C.U. and the engine gaspath. Thus, after engine change, it is recommended that F.C.U. trim be checked to be certain that the F.C.U., as trimmed, is still properly matched to the engine gaspath.

D. Satisfied that the F.C.U. is properly trimmed after engine change, the aircraft is placed in revenue service. After the newly installed engine accrues considerable operating hours, it can be classified as a "high time engine."

E. In preparation for the next take-off the pilot advances the power levers to attain the desired target take-off Engine Pressure Ratio (EPR). He notes that the power lever for the "high time engine" is fully advanced while EPR is less than the target, but all other engine operating parameters are within limits. The engine has become "power lever-limited" prior to attaining take-off EPR. It is no longer producing rated thrust within the available power lever travel and, as a result, the aircraft is returned to the terminal for maintenance action.

6-2. EFFECT OF OPERATING HOURS ON TRIM

A. Consider the possible cause for becoming power lever-limited. Over the course of the many operating hours that have accrued on our "high time engine," some forms of gaspath deterioration have developed and the engine's gaspath has changed. As a result, the F.C.U., as trimmed upon engine installation, will no longer provide the fuel flow necessary to meet the demands of the deteriorated gaspath. Simply stated, the F.C.U. is no longer properly matched to the existing gaspath.

B. Alluding to the fact that the experienced maintenance man would recognize the reported symptoms as possible F.C.U. "undertrim," we shall outline, through example, the F.C.U. Trim Procedures that are generally applicable to all JT8D installations.

6-3. TRIM ADJUSTMENTS

Trim is accomplished through adjustments to the fuel control and the adjustment points on the F.C.U. are located and defined in Figure 6-1.

A. Mil Trim Adjustment: Utilized for setting the proper Pt7 "HgA value.
- Clockwise rotation increases Pt7
- Counterclockwise rotation decreases Pt7

B. Idle Trim Adjustment: Utilized for setting the proper high pressure compressor (N2) idle speed.
- Clockwise rotation increases idle N2 speed
- Counterclockwise rotation decreases idle N2 speed

C. Part Power Trim Stop: Utilized for establishing a fixed reference power lever angle at which the desired Pt7 (Mil Trim) will be adjusted.

6-4. PURPOSE OF PART POWER TRIM STOP

A. To limit the amount of operational stress, noise, and time at high thrust, the F.C.U. Mil Trim setting is established at a reduced thrust output. The thrust reduction is accomplished by employing the Part Power Trim Stop as defined in C above.

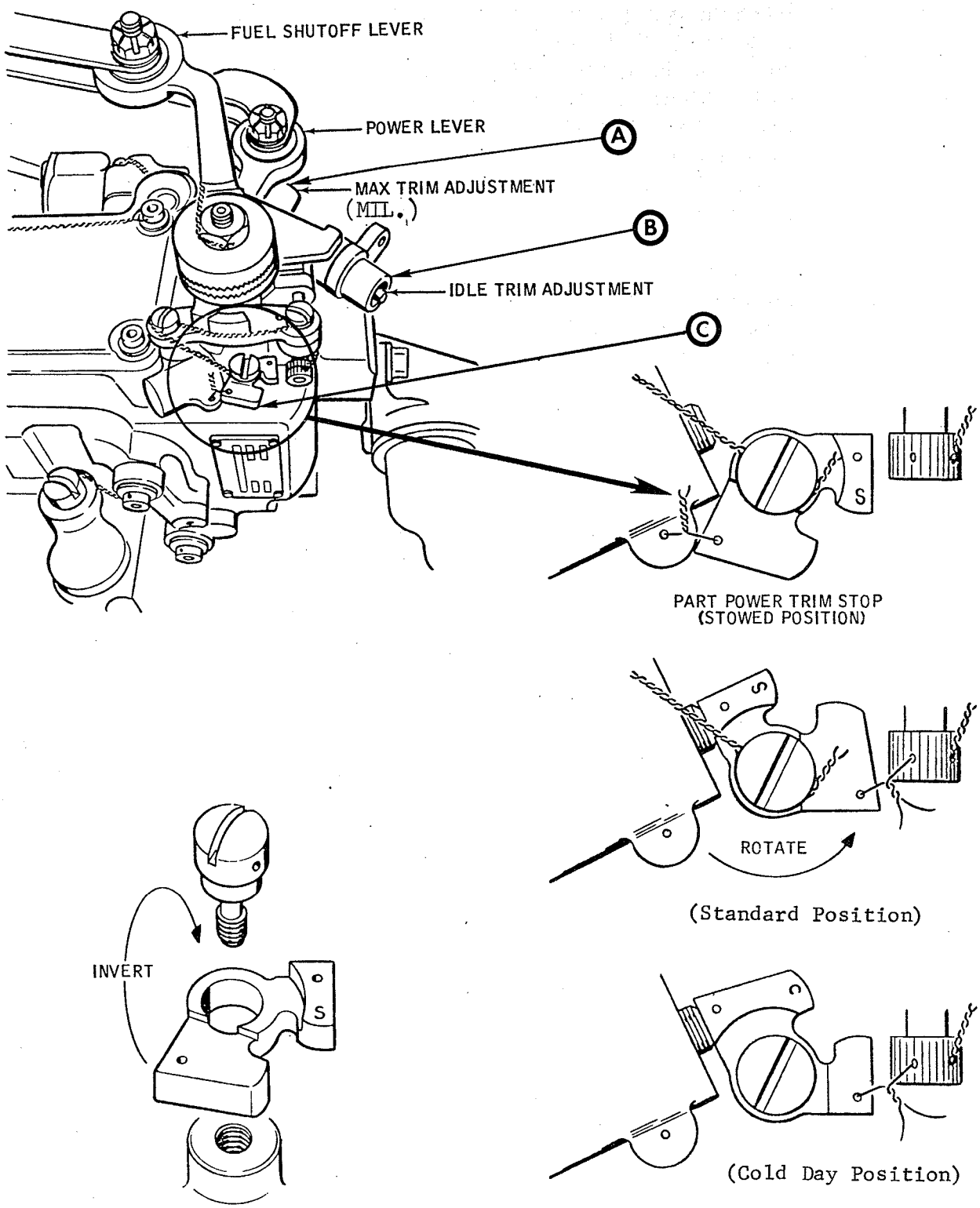

POWER TRIM STOPS
Figure 6-1

B. When the part power trim stop is in the trim position as shown in Figure 6-1, it physically limits the available power lever travel to something less than maximum. This two position trim stop is marked with the letter S (Standard) on one side, and the letter C (Cold) on the other. The two position option permits trimming on "cold days" without exceeding maximum permissible thrust, and assures that the anti-surge bleed valves are closed when the power lever is against the trim stop on a "hot day."

C. To change positions, the trim stop must be removed from the F.C.U. and inverted so that the proper letter "S" or "C" is facing the mechanic. Proper stop position can be readily determined by referring to the appropriate Trim Table. Figures 6-2 and 6-3.

727 TRIM TARGET SELECTION

ASSUME: AMBIENT TEMPERATURE 84°F
BAROMETRIC PRESSURE 29.8"HgA

LOCAL BAROMETRIC PRESSURE

DATA PLATE Pt7

BAROMETER, INCHES OF MERCURY				29.3	29.4	29.5	29.6	29.7	29.8	29.9	30.0	30.1	30.2	30.3	30.4	30.5	30.6
OAT °F	DATA PLATE CORR. % N2	IDLE % N2 NO.1+3 (NO.2)	DATA PLATE PT7 NO. 1+3	48.3	48.5	48.7	48.8	49.0	49.2	49.3	49.5	49.7	49.8	50.0	50.2	50.3	50.5
			DATA PLATE PT7 NO. 2	47.8	48.0	48.1	48.3	48.4	48.6	48.8	48.9	49.1	49.3	49.4	49.6	49.7	49.9
82	+1.97	58.2 (56.2)	NO. 1+3 PP PT7	49.7	49.9	50.0	50.2	50.4	50.5	50.7	50.9	51.1	51.2	51.4	51.6	51.7	51.9
			NO. 2 PP PT7	49.1	49.2	49.4	49.6	49.7	49.9	50.1	50.2	50.4	50.6	50.7	50.9	51.1	51.3
			NO. 1,2,3 PP EPR	1.70	1.70	1.70	1.70	1.70	1.70	1.70	1.70	1.70	1.70	1.70	1.70	1.70	1.70
			NO. 1,2,3 TO EPR	1.98	1.98	1.98	1.98	1.98	1.98	1.98	1.98	1.97	1.97	1.97	1.96	1.96	[illegible]
			NO. 2 PP PT7/PAM	1.67	1.67	1.67	1.67	1.67	1.67	1.67	1.67	1.67	[illegible]	[illegible]	1.67	1.67	1.67
84	+2.14	58.3 (56.3)	NO. 1+3 PP PT7	49.4	49.6	49.8	49.9	50.1	50.3	50.4	[illegible]	50.8	50.9	51.1	51.3	[illegible]	51.6
			NO. 2 PP PT7	48.8	49.0	49.2	49.3	49.5	49.7	49.8	50.0	50.2	50.3	[illegible]	50.7	50.8	51.0
			NO. 1,2,3 PP EPR	1.69	1.69	1.69	1.69	1.69	1.69	[illegible]	1.69	1.69	1.69	1.69	1.69	1.69	1.69
			NO. 1,2,3 TO EPR	1.98	1.98	1.98	1.98	1.98	1.98	[illegible]	1.98	1.97	1.97	1.97	1.96	1.96	1.96
			NO. 2 PP PT7/PAM	1.67	1.67	1.67	1.67	1.67	1.67	1.67	1.67	1.67	1.67	1.67	1.67	1.67	1.67

DATA PLATE CORRECTION %N2

AMBIENT TEMPERATURE

IDLE % N2

PART POWER Pt7

PART POWER EPR

TAKE OFF EPR

NOTE: IDLE % N2 No. 1&3 (No. 2) — Percent N2 rpm target to which IDLE trim screw is adjusted. Upper values apply to No. 1 and No. 3 engines. Lower values, in parenthesis, apply to No. 2 engine.

NOTE: PP PT7/PAM — Ratio of engine exhaust pressure to ambient pressure. These values are not part of the normal trim run, however, they may be used to check No. 2 engine EPR indicating system when an excessive EPR discrepancy is apparent. Refer to paragraph 2.D (9)(b) of section 71-00-30 in the Boeing Maintenance Manual.

NOTE: ENTER TABLE AT AMBIENT TEMPERATURE AND PRESSURE OF THE DAY TO DETERMINE TARGET VALUES.

Figure 6-2

DC-9 TRIM TARGET SELECTION

ASSUME: AMBIENT TEMPERATURE 41°F
BAROMETRIC PRESSURE 30.0"HgA

LOCAL BAROMETRIC PRESSURE

	TEMPERATURE °C	TEMPERATURE °F	DATA PLATE % RPM CORR	IDLE % N2 RPM		FIELD BAROMETRIC PRESSURE 32.0	31.8	31.6	31.4	31.2	31.0	30.8	30.6	30.4	30.2	30.0	29.8	29.6	29.4	29.2
COLD DAY TRIM STOP	0	32.0	-2.288	51.52	PP P_{t7}	53.4	53.1	52.8	52.4	52.1	51.8	51.4	51.1	50.8	50.4	50.1	49.8	49.4	49.1	48.8
					PP EPR	1.67	1.67	1.67	1.67	1.67	1.67	1.67	1.67	1.67	1.67	1.67	1.67	1.67	1.67	1.67
					TO EPR	1.91	1.92	1.92	1.93	1.93	1.94	1.95	1.96	1.97	1.97	1.98	1.99	2.00	2.01	2.02
	+1	33.8	-2.112	51.60	PP P_{t7}	53.4	53.1	52.8	52.4	52.1	51.8	51.4	51.1	50.8	50.4	50.1	49.8	49.4	49.1	48.8
					PP EPR	1.67	1.67	1.67	1.67	1.67	1.67	1.67	1.67	1.67	1.67	1.67	1.67	1.67	1.67	1.67
					TO EPR	1.91	1.92	1.92	1.93	1.93	1.94	1.95	1.96	1.97	1.97	1.98	1.99	2.00	2.01	2.02
	+2	35.6	-1.936	51.69	PP P_{t7}	53.1	52.8	52.5	52.1	51.8	51.5	51.1	50.8	50.5	50.1	49.8	49.5	49.1	48.8	48.5
					PP EPR	1.66	1.66	1.66	1.66	1.66	1.66	1.66	1.66	1.66	1.66	1.66	1.66	1.66	1.66	1.66
					TO EPR	1.91	1.92	1.92	1.93	1.93	1.94	1.95	1.96	1.97	1.97	1.98	1.99	2.00	2.01	2.02
	+3	37.4	-1.848	51.78	PP P_{t7}	61.1	60.7	60.4	60.0	59.6	59.2	58.8	58.4	58.1	57.7	57.3	56.9	56.5	56.2	55.8
					PP EPR	1.91	1.91	1.91	1.91	1.91	1.91	1.91	1.91	1.91	1.91	1.91	1.91	1.91	1.91	1.91
					TO EPR	1.91	1.92	1.92	1.93	1.93	1.94	1.95	1.96	1.97	1.97	1.98	1.99	2.00	2.01	2.02
	[illegible]	39.2	-1.672	51.86	PP P_{t7}	60.8	60.4	60.0	59.7	59.3	58.9	58.5	58.1	57.8	57.4	57.0	56.6	56.2	55.9	55.5
					PP EPR	1.90	1.90	1.90	1.90	1.90	1.90	1.90	1.90	1.90	1.90	1.90	1.90	1.90	1.90	1.90
					TO EPR	1.91	1.92	1.92	1.93	1.93	1.94	1.95	1.96	1.97	1.97	1.98	1.99	2.00	2.01	[illegible]
	[illegible]	41.0	-1.496	51.94	PP P_{t7}	60.5	60.1	59.7	59.3	59.0	58.6	58.2	57.8	57.5	57.1	56.7	[illegible]	55.9	55.6	55.2
					PP EPR	1.89	1.89	1.89	1.89	1.89	1.89	1.89	1.89	1.89	1.89	1.89	1.89	1.89	1.89	1.89
					TO EPR	1.91	1.92	1.92	1.93	1.93	1.94	1.95	1.96	1.97	1.97	1.98	[illegible]	[illegible]	2.01	2.02
	+6	42.8	-1.408	52.03	PP P_{t7}	60.2	59.8	59.4	59.0	58.7	58.3	57.9	57.5	57.2	56.8	56.4	[illegible]	55.6	[illegible]	54.9
					PP EPR	1.88	1.88	1.88	1.88	1.88	1.88	1.88	1.88	1.88	1.88	1.88	[illegible]	1.88	1.88	[illegible]
					TO EPR	1.91	1.92	1.92	1.93	1.93	1.94	1.95	1.96	1.97	1.97	1.98	1.99	[illegible]	2.01	2.02
	+7	44.6	-1.232	52.10	PP P_{t7}	59.8	59.5	59.1	58.7	58.3	58.0	57.6	57.2	56.8	56.5	56.1	55.7	[illegible]	55.0	54.6
					PP EPR	1.87	1.87	1.87	1.87	1.87	1.87	1.87	1.87	1.87	1.87	1.87	1.87	1.87	[illegible]	1.87
					TO EPR	1.91	1.92	1.92	1.93	1.93	1.94	1.95	1.96	1.97	1.97	1.98	1.99	2.00	[illegible]	2.02
	+8	46.4	-1.144	52.19	PP P_{t7}	59.5	59.1	58.8	58.4	58.0	57.7	57.3	56.9	56.5	56.2	55.8	55.4	55.1	54.7	[illegible]
					PP EPR	1.86	1.86	1.86	1.86	1.86	1.86	1.86	1.86	1.86	1.86	1.86	1.86	1.86	1.86	1.86
					TO EPR	1.91	1.92	1.92	1.93	1.93	1.94	1.95	1.96	1.97	1.97	1.98	1.99	2.00	2.01	2.02

DATA PLATE CORRECTION %N2

AMBIENT TEMPERATURE

IDLE % N2

PART POWER Pt7

PART POWER EPR

TAKE OFF EPR

NOTE: ENTER TABLE AT AMBIENT TEMPERATURE AND PRESSURE OF THE DAY TO DETERMINE TARGET VALUES.

Figure 6-3

6-5. TRIM DATA RECORDING

In order to facilitate the recording of trim targets and trim data, a trim check sheet, such as appears in Figure 6-4 should be prepared. Ambient temperature, field barometric pressure, and target idle N2 and Pt7 values should be entered prior to the trim run. Observed values prior to trimming should be recorded in the appropriate spaces, and finally, the actual trimmed values that are observed subsequent to trimming.

6-6. FACTORS AFFECTING TRIM

A. Engine trim is affected by ambient conditions, and aircraft system bleed and power extraction requirements. Thus, it is necessary, prior to trimming, that the existing ambient temperature and field barometric pressure be accurately recorded. Wind velocity must also be considered since trim adjustment loses its effectiveness as the angle of wind direction increases towards 90 degrees from the engine inlet (see Figure 6-5). Engines that are trimmed in a crosswind will be overtrimmed in a no-wind condition while engines trimmed in a headwind will tend to be undertrimmed in calm conditions.

B. Tailwind conditions (beyond 90 degrees) tend to direct the exhaust gases forward to the engines' inlet. Since published trim targets are corrected for ambient temperatures, exhaust gases ingested by the engine will produce inaccurate trim adjustment.

C. Relative wind velocity may be disregarded providing the velocity is below 10 MPH, and a blast fence is used; otherwise the aircraft should be headed into the wind. Engines should not be trimmed when the wind velocity exceeds 25 MPH or when icing conditions exist.

D. Since the trim targets are published on the basis of no/or essential power and air extraction, activation of certain aircraft/engine interface systems could result in "mistrimming." To preclude mistrimming, the aircraft maintenance manual should be consulted for proper systems selection.

CAUTION: All trimming must be performed in accordance with applicable airframe maintenance manual procedures.

TRIM AND DATA PLATE SPEED

WORK SHEET

1) Assume:

Ambient Temperature =
Barometric Pressure =
Data Plate Speed =

2) Determine:

	TARGET	TOLERANCE	MAX/MIN	OBSERVED	TRIMMED
Idle RPM % N2					
Part Power Pt7					
Part Power EPR					
T.O. EPR					
Data Plate Corr. % N2					
Data Plate Pt7					
Data Plate EPR					

Position of Part Power Trim Stop

Figure 6-4

WIND DIRECTION & VELOCITY LIMITS

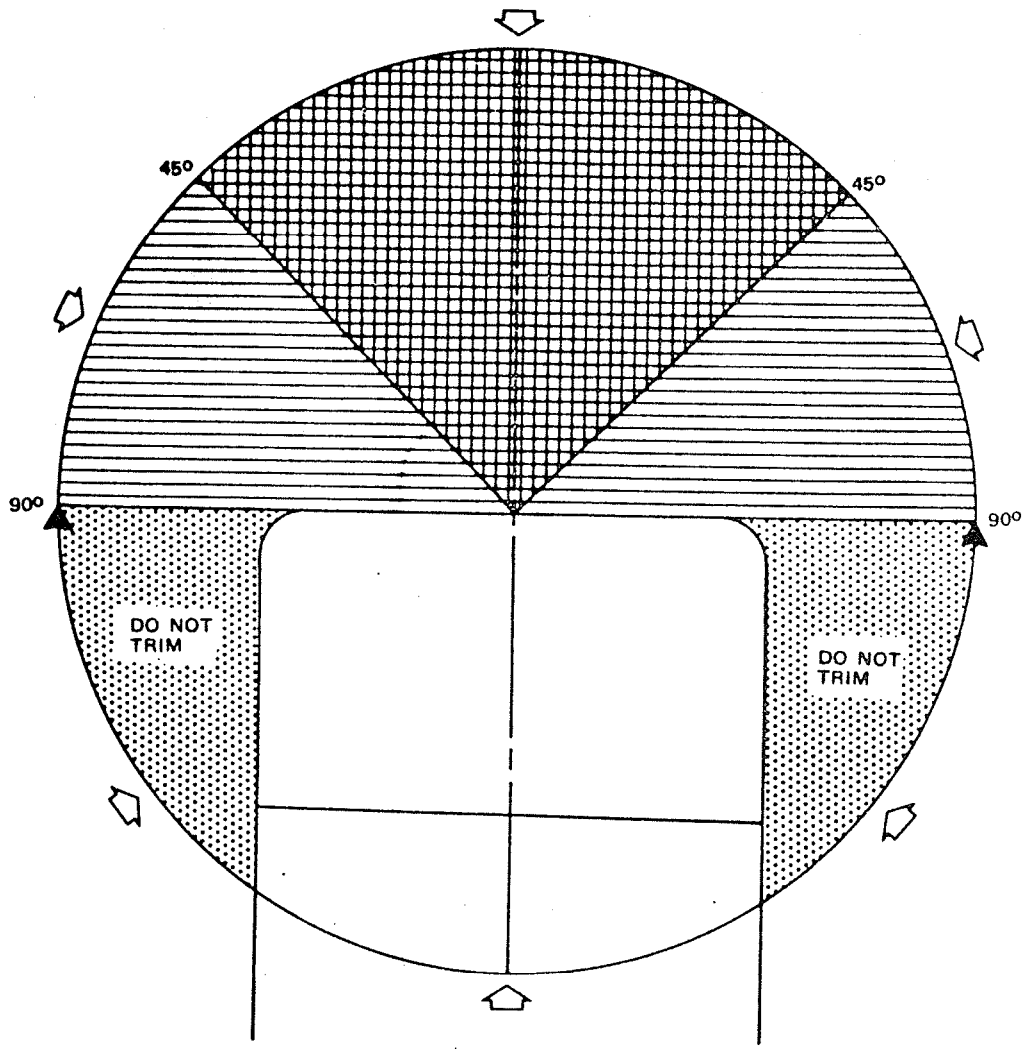

NOTE:

TYPICAL FOR ALL ENGINES.

TO ACHIEVE CONSISTENTLY GOOD TRIM RESULTS, THE AIRPLANE SHOULD BE HEADED INTO THE WIND AND TRIMMED WHEN WIND VELOCITY (STEADY OR GUSTS) IS NOT MORE THAN 25 MPH.

WHEN WIND VELOCITY IS LESS THAN 10 MPH, WIND DIRECTION MAY BE DISREGARDED IF A BLAST FENCE IS USED DURING ENGINE TRIM.

TRIMS ARE NOT RECOMMENDED WHEN WIND VELOCITY EXCEEDS 25 MPH OR WHEN ICING CONDITIONS PREVAIL.

PREFERRED

ACCEPTABLE

UNACCEPTABLE

WIND DIRECTION

Figure 6-5

6-7. BOEING 727 TRIMMING EXAMPLE

A. Determine the ambient temperature and field barometric pressure.

NOTE: It is imperative that the current ambient temperature (Tam) and field barometric pressure (Pam) be recorded accurately because Pt7 and engine thrust can vary significantly for a fixed power lever angle (Part Power) with changes in atmospheric conditions.

Assume for this example: Tam = 24°F
Pam = 29.6 "HgA

B. Position the aircraft into the wind and make certain that all unnecessary air and power extraction is OFF (refer to the aircraft maintenance manual for systems selection).

C. Extract the following trim targets from the appropriate trim table (see Figure 6-6). See Figure 6-2 for detailed table explanation.

1) Target Idle N2% = 55.6%
Apply tolerances + 0.0% N2, and -1.0% N2
thus: Target Idle N2% = 55.6%
Minimum Idle N2% = 54.6%
Always strive to achieve the target value.

2) Target Part Power Pt7 "HgA = 58.2
Apply tolerances + 0.5 "HgA, and -0.0 "HgA
thus: Target Part Power Pt7 "HgA = 58.2
Maximum Part Power Pt7 "HgA = 58.7
Always strive to achieve the target value.

3) Target Part Power Engine Pressure Ratio (EPR) = 1.97 units.

4) Target Take-Off EPR = 2.00 units.

D. Position the part power trim stop in the trim position (see Figure 6-1).

NOTE: The part power trim stop is marked with the letter "S" (Standard) on one side, and the letter "C" (Cold) on the other. To determine which stop position should be used refer to the note in the lower right-hand corner of the Boeing Trim Table (see Figure 6-6). Trim stop position may be changed by removing the stop and inverting it with the correct letter S or C facing the mechanic.

In this example the Standard (S) side should be used.

BOEING 727 TRIM TABLE

BAROMETER, INCHES OF MERCURY				29.3	29.4	29.5	29.6	29.7	29.8	29.9	30.0	30.1	30.2	30.3	30.4	30.5	30.6
OAT °F	DATA PLATE CORR. %N2	IDLE %N2 NO.1+3 (NO.2)	DATA PLATE NO. 1+3	48.3	48.5	48.7	48.8	49.0	49.2	49.3	49.5	49.7	49.8	50.0	50.2	50.3	50.5
			PT7 NO. 2	47.8	48.0	48.1	48.3	48.4	48.6	48.8	48.9	49.1	49.3	49.4	49.6	49.7	49.9
18	-3.60	55.3 (53.3)	NO. 1+3 PP PT7	58.4	58.6	58.8	59.0	51.4	51.6	51.8	52.0	52.1	52.3	52.5	52.6	52.8	53.0
			NO. 2 PP PT7	57.4	57.6	57.8	58.0	50.8 *	51.0 *	51.1 *	51.3 *	51.5 *	51.6 *	51.8 *	52.0 *	52.2 *	52.3 *
			NO. 1,2,3 PP EPR	1.99	1.99	1.99	1.99	1.73	1.73	1.73	1.73	1.73	1.73	1.73	1.73	1.73	1.73
			NO. 1,2,3 TO EPR	2.01	2.01	2.00	2.00	1.99	1.99	1.98	1.98	1.97	1.97	1.97	1.96	1.96	1.96
			NO. 2 PP PT7/PAM	1.96	1.96	1.96	1.96	1.71	1.71	1.71	1.71	1.71	1.71	1.71	1.71	1.71	1.71
20	-3.42	55.4 (53.4)	NO. 1+3 PP PT7	58.1	58.3	58.5	58.7	58.9	59.1	51.6	51.7	51.9	52.1	52.3	52.4	52.6	52.8
			NO. 2 PP PT7	57.2	57.4	57.6	57.8	58.0	58.2	50.9 *	51.1 *	51.3 *	51.4 *	51.6 *	51.8 *	52.0 *	52.1 *
			NO. 1,2,3 PP EPR	1.98	1.98	1.98	1.98	1.98	1.98	1.72	1.72	1.72	1.72	1.72	1.72	1.72	1.72
			NO. 1,2,3 TO EPR	2.01	2.01	2.00	2.00	1.99	1.99	1.98	1.98	1.97	1.97	1.97	1.96	1.96	1.96
			NO. 2 PP PT7/PAM	1.95	1.95	1.95	1.95	1.95	1.95	1.70	1.70	1.70	1.70	1.70	1.70	1.70	1.70
22	-3.25	55.5 (53.5)	NO. 1+3 PP PT7	57.9	58.1	58.3	58.5	58.7	58.9	59.1	59.3	51.7	51.9	52.1	52.2	52.4	52.6
			NO. 2 PP PT7	57.0	57.2	57.4	57.6	57.8	58.0	58.2	58.4	51.1 *	51.2 *	51.4 *	51.6 *	51.8 *	51.9 *
			NO. 1,2,3 PP EPR	1.98	1.98	1.98	1.98	1.98	1.98	1.98	1.98	1.72	1.72	1.72	1.72	1.72	1.72
			NO. 1,2,3 TO EPR	2.01	2.01	2.00	2.00	1.99	1.99	1.98	1.98	1.97	1.97	1.97	1.96	1.96	1.96
			NO. 2 PP PT7/PAM	1.95	1.95	1.95	1.95	1.95	1.95	1.95	1.95	1.70	1.70	1.70	1.70	1.70	1.70
24	-3.07	55.6 (53.6)	NO. 1+3 PP PT7	57.6	57.8	58.0	58.2	58.4	58.6	58.8	59.0	59.2	59.4	59.6	52.0	52.2	52.4
			NO. 2 PP PT7	56.8	57.0	57.2	57.4	57.6	57.8	58.0	58.1	58.3	58.5	58.7	51.4 *	51.5 *	51.7 *
			NO. 1,2,3 PP EPR	1.97	1.97	1.97	1.97	1.97	1.97	1.97	1.97	1.97	1.97	1.97	1.71	1.71	1.71
			NO. 1,2,3 TO EPR	2.01	2.01	2.00	2.00	1.99	1.99	1.98	1.98	1.97	1.97	1.97	1.96	1.96	1.96
			NO. 2 PP PT7/PAM	1.94	1.94	1.94	1.94	1.94	1.94	1.94	1.94	1.94	1.94	1.94	1.69	1.69	1.69

* USE COLD WEATHER PART POWER TRIM STOP

FOR TARGETS TO -RIGHT OF "STAGGERED" LINE USE "C" STOP
- LEFT OF "STAGGERED" LINE USE "S" STOP

Figure 6-6

E. Connect the precision Pt7 gage and precision tachometer (see Figure 6-7 and 6-8).

F. Connect remote trim equipment (see Figure 6-9).

If remote trim equipment is not available, the trim screws may be adjusted manually, adhering to accepted safety precautions.

At this time the precision Pt7 gage, precision tachometer, and the remote trim box should be positioned on the aircraft flight deck.

G. Start the engine and stabilize at idle.

H. Accelerate the engine from idle to the part power trim stop five times and stabilize at idle. This procedure exercises the F.C.U. and minimizes hysteresis.

I. Observe the N2 speed on the precision tachometer and, utilizing the remote trim box, adjust "idle trim" as necessary to attain the idle speed determined in paragraph 6-7, C 1. Always strive to achieve the target value. The final adjustment should always be in the increase direction. This eliminates slack in the various internal mechanisms and assures trim target repeatability.

J. Check for proper compressor bleed valve operation by slowly advancing the power lever until a sudden increase in EPR is noted. This increase is approximately .05 EPR units and it indicates that the valves have closed. Record N1% RPM at closure and compare with Bleed Valve Operating Curve (Figure 6-10). After the closure point has been ascertained to be correct, slowly retard the throttle until the bleeds open. This will be evidenced by a sudden decrease in EPR units (approximately .05). Refer to Curve at bleed opening % N1 value and record opening % RPM value.

K. Advance the power lever until the part power trim stop is contacted and allow a stabilization period of four to five minutes.

L. Observe the value of Pt7 "HgA on the precision Pt7 gage. If Pt7 "HgA is not the target value determined in paragraph 6-7, C 2, activate the remote trim box until the target value is attained. Always attempt to set the target value while trimming in the <u>increase</u> direction. At this time the aircraft EPR indicator should read the value 1.97 units determined in step C 3.

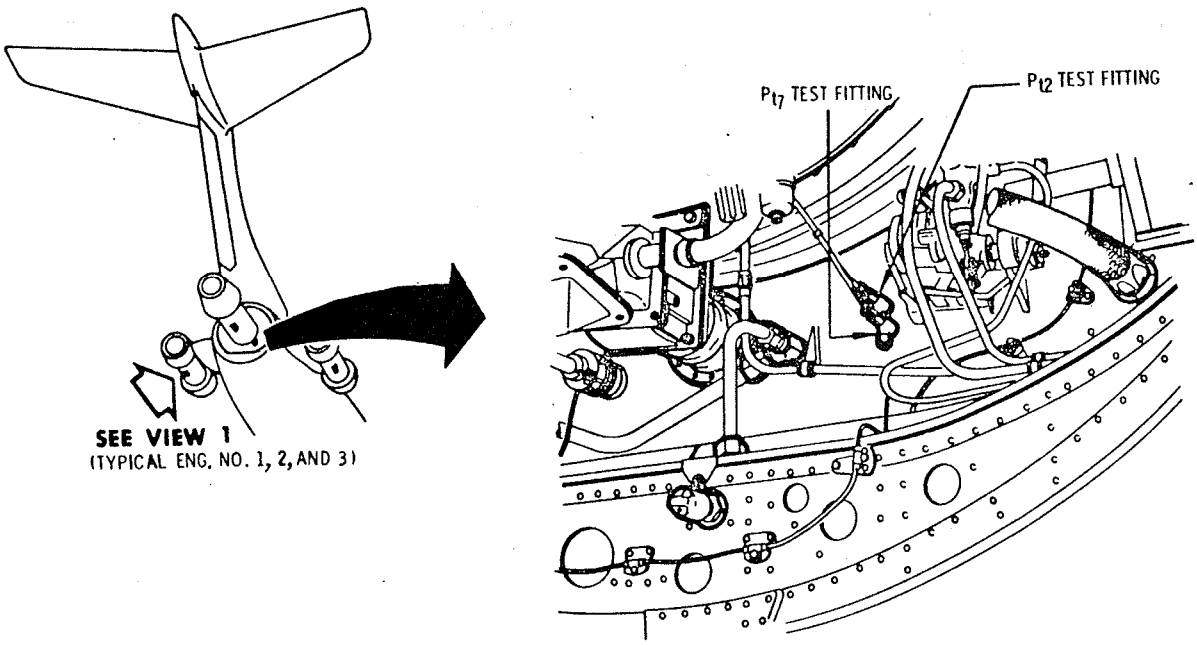

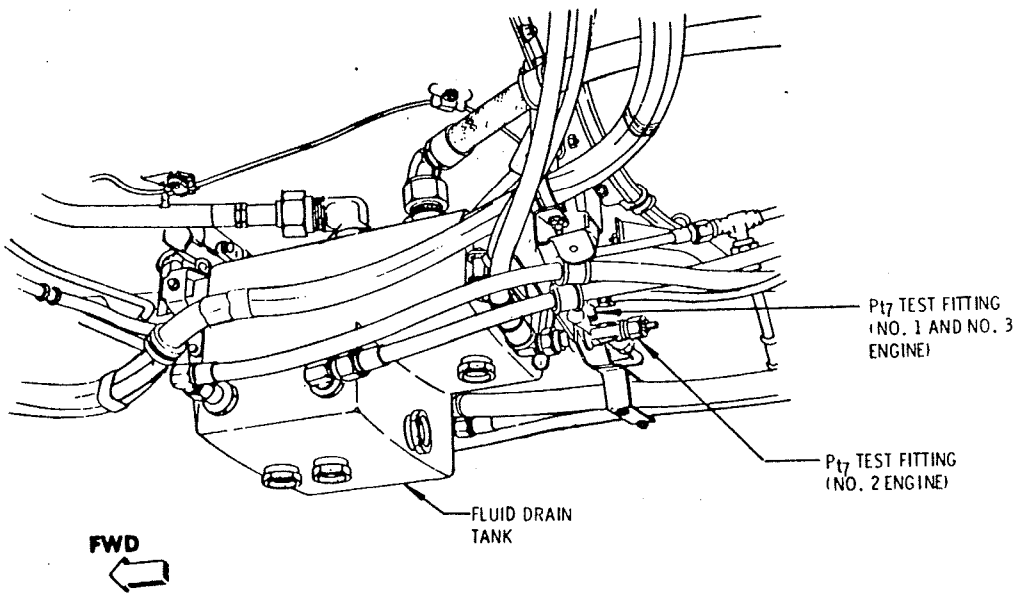

Pt7 TEST FITTING LOCATIONS (727)

Figure 6-7

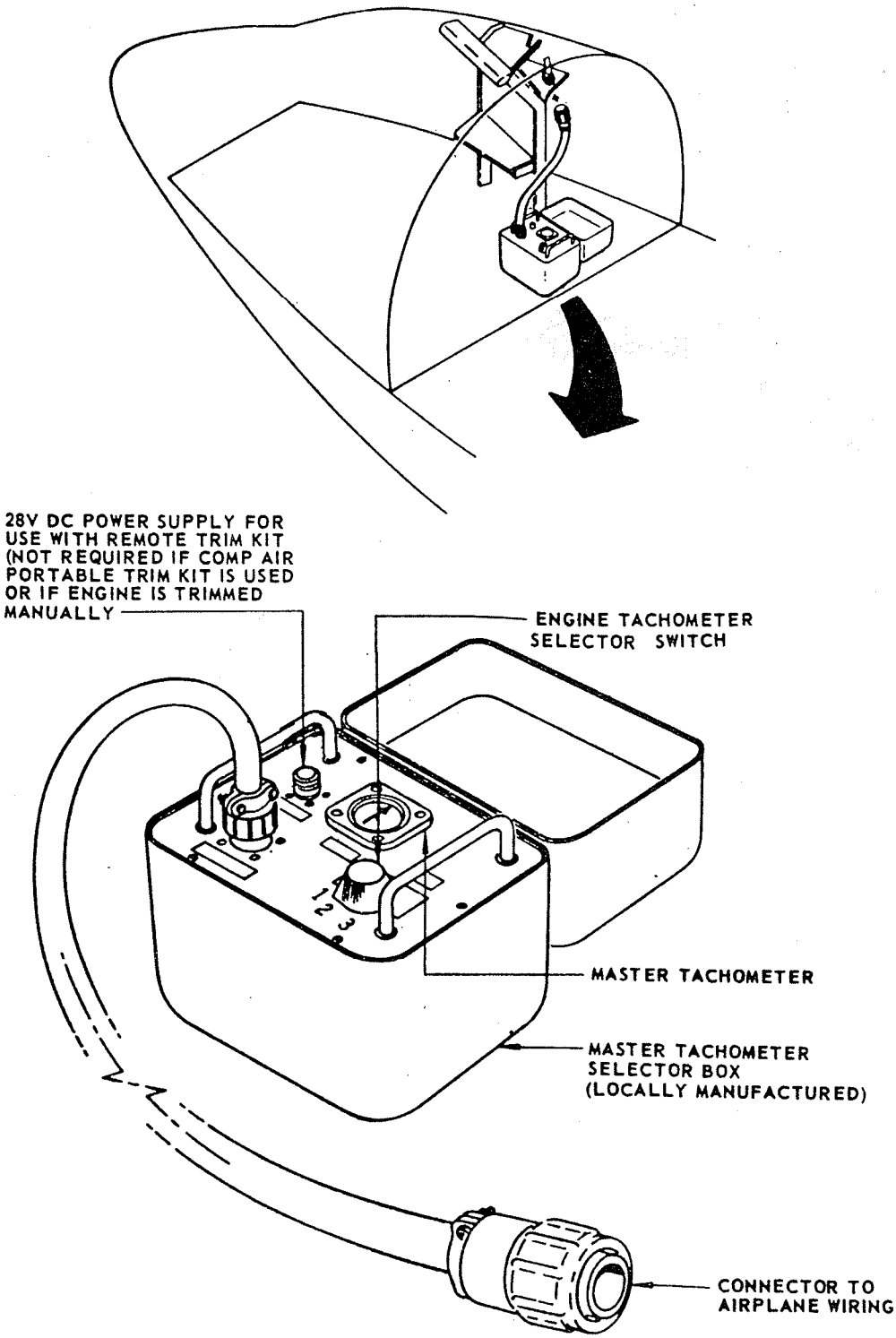

PRECISION TACHOMETER

Figure 6-8

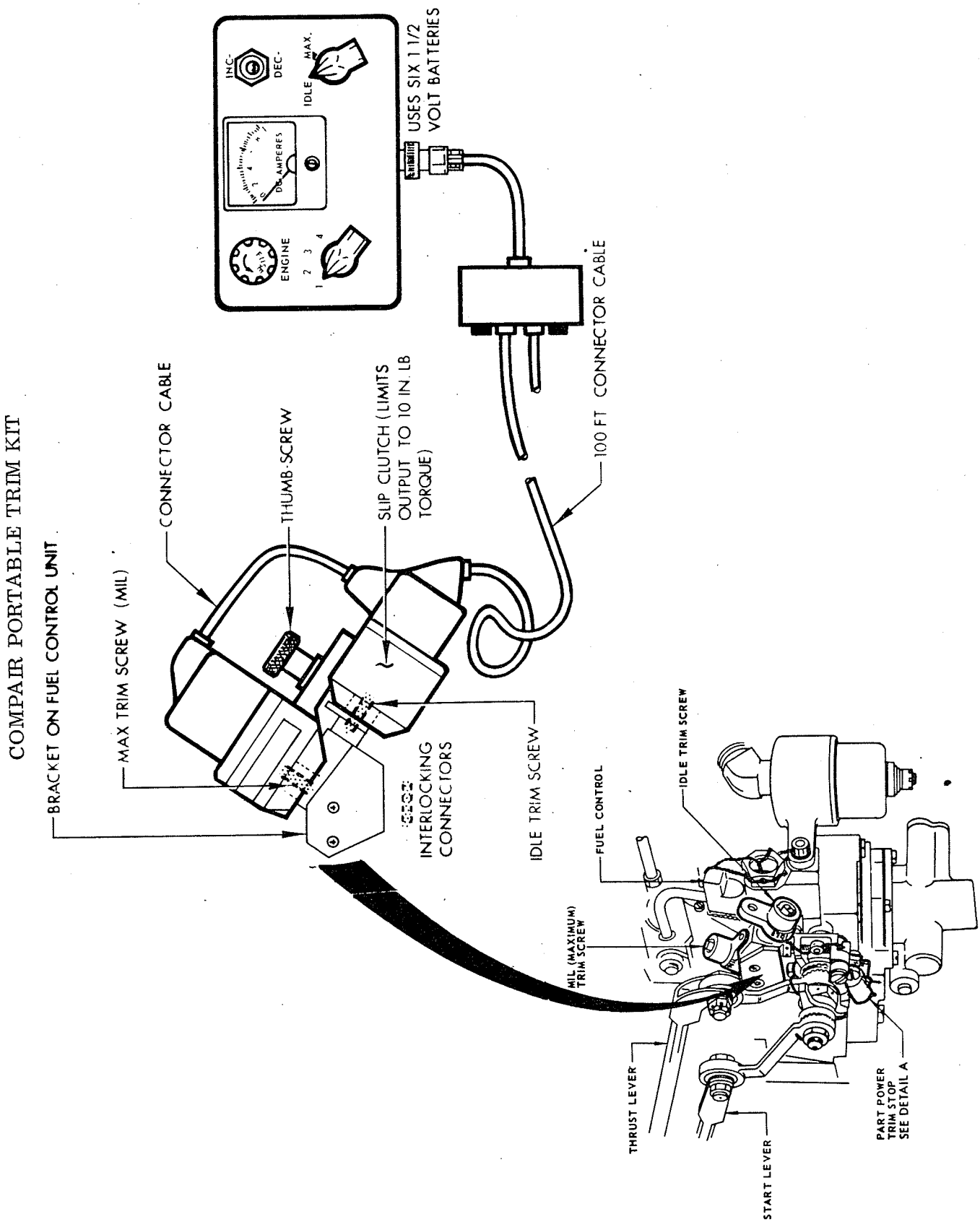
COMPAIR PORTABLE TRIM KIT
BRACKET ON FUEL CONTROL UNIT
MAX TRIM SCREW (MIL)
CONNECTOR CABLE
THUMB-SCREW
SLIP CLUTCH (LIMITS OUTPUT TO 10 IN. LB TORQUE)
INTERLOCKING CONNECTORS
IDLE TRIM SCREW
100 FT CONNECTOR CABLE
USES SIX 1 1/2 VOLT BATTERIES
INC-
DEC-
MAX.
IDLE
DC AMPERES
ENGINE
1
2
3
4
FUEL CONTROL
IDLE TRIM SCREW
MIL (MAXIMUM) TRIM SCREW
THRUST LEVER
START LEVER
PART POWER TRIM STOP SEE DETAIL A

Figure 6-9

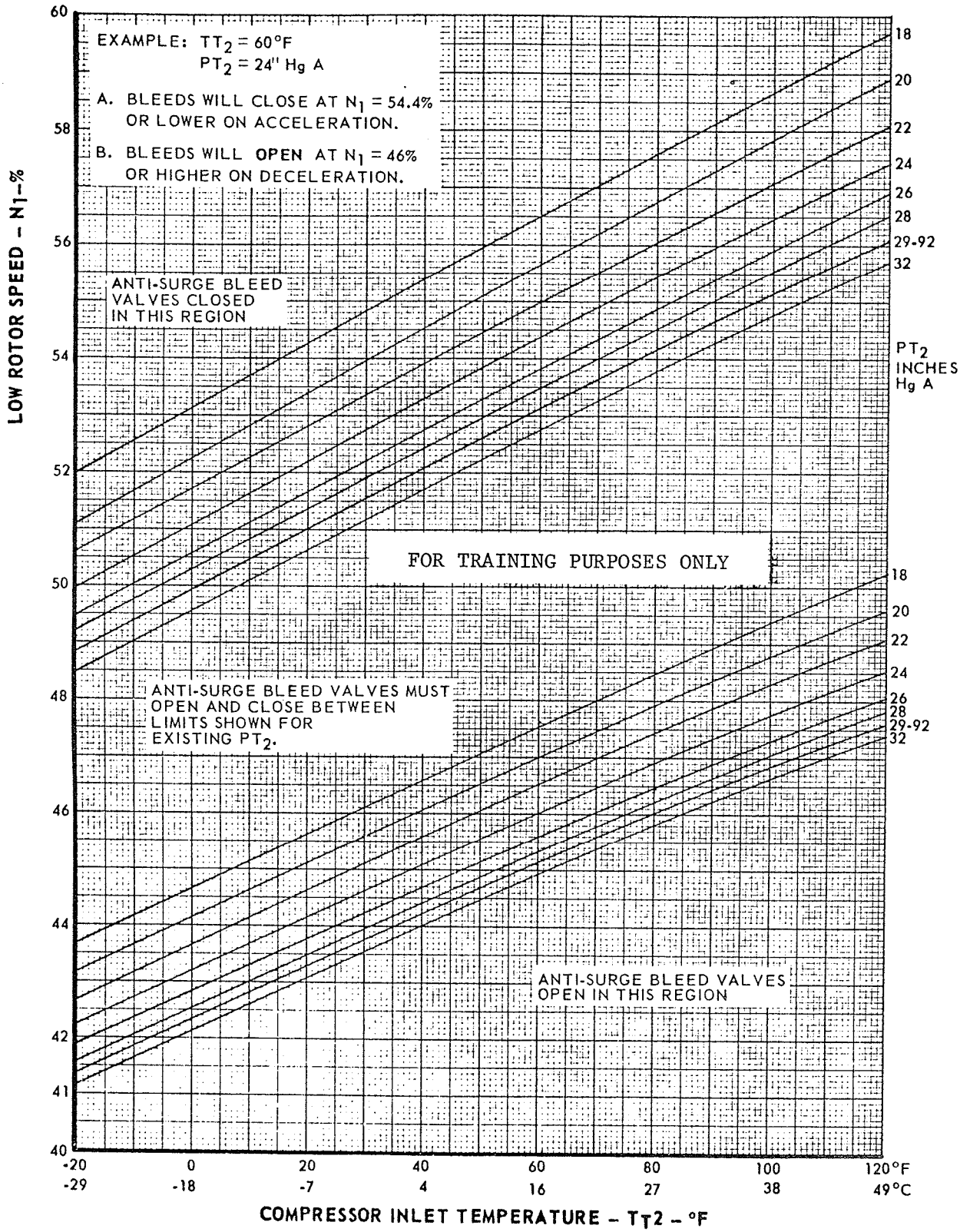

COMPRESSOR BLEED VALVE SCHEDULE

Figure 6-10

M. Retard the power lever to the idle position and recheck idle N2 speed.

NOTE: More than one trim adjustment may be required as the idle and mil adjustments affect each other. If adjustments are necessary at either idle or part power, the other should be rechecked.

N. After setting the idle and part power trim targets within the tolerances in paragraph 6-7, C 1 and C 2, remove the trim equipment and return the part power stop to its normal or "stowed" position (see Figure 6-1).

O. Advance the power lever to the target take-off EPR value (2.00 units) determined in paragraph 6-7, C 4. This EPR value should be attained with less than full power lever travel and all engine operating parameters should be within limits. Mark position of forward edge of power lever on control stand using grease pencil, tape or other temporary marking method.

P. Retard power lever to idle, stabilize and shutdown in accordance with Boeing Maintenance Manual instructions.

Q. Determination of throttle cushion.

1) Advance thrust lever to full thrust position and allow it to spring back. (This is cushion rigged into the thrust control system.)

2) Measure and record distance between leading edge of power lever in spring-back position and take-off mark, made in paragraph 6-7, O, on the control stand. Normally, unused travel at aisle stand will be between 1.0 and 1.75 inches depending on Tam, Pam, and rigging tolerances.

3) Place thrust lever in idle position.

This completes the Boeing 727 Trim Procedure.

6-8. DOUGLAS DC-9 TRIMMING EXAMPLE

A. Determine the ambient temperature and field barometric pressure.

NOTE: It is imperative that the ambient temperature (Tam), and field barometric pressure (Pam) be known accurately since Pt7 and engine thrust will vary significantly for a fixed power lever angle (part power) with changes in atmospheric conditions.

Assume for this example: Tam = 18°C (64.4°F)
Pam = 30.4 "HgA

B. Position the aircraft into the wind and make certain that all unnecessary air and power extraction is OFF (refer to the aircraft maintenance manual for systems selection).

C. Extract the following trim targets from the appropriate trim tables (see Figures 6-3 and 6-11 for detailed table explanation).

1) Target Idle N2% = 52.99%
Apply tolerances + 0.0% N2, and -2.0% N2
thus: Target Idle N2% = 52.99%
Minimum Idle N2% = 50.99%
Always strive to achieve the target value.

2) Target Part Power Pt7 "HgA = 54.1
Apply tolerances + 0.5 "HgA, and -0.0 "HgA
thus: Target Part Power Pt7 "HgA = 54.1
Maximum Part Power Pt7 "HgA = 54.6
Always strive to achieve the target value.

3) Target Part Power Engine Pressure Ratio (E.P.R.) = 1.78 units.

4) Target Take-Off E.P.R. = 1.97 units.

D. Position the part power trim stop in the trim position (see Figure 6-1).

NOTE: The part power trim stop is marked with the letter "S" (Standard) on one side, and the letter "C" (Cold) on the other. To determine which stop position should be used refer to the left-hand margin in the Douglas Trim Table (see Figure 6-11). Trim stop position may be changed by removing the stop and inverting it with the correct letter S or C facing the mechanic.

In this example the Standard (S) side should be used.

DC9 TRIM TABLE

	TEMPERATURE °C	TEMPERATURE °F	DATA PLATE % RPM CORR	IDLE % N2 RPM		32.0	31.8	31.6	31.4	31.2	31.0	30.8	30.6	30.4	30.2	30.0	29.8	29.6	29.4	29.2
COLD DAY TRIM STOP	0	32.0	-2.288	51.52	PP P_{t7}	53.4	53.1	52.8	52.4	52.1	51.8	51.4	51.1	50.8	50.4	50.1	49.8	49.4	49.1	48.8
					PP EPR	1.67	1.67	1.67	1.67	1.67	1.67	1.67	1.67	1.67	1.67	1.67	1.67	1.67	1.67	1.67
					TO EPR	1.91	1.92	1.92	1.93	1.93	1.94	1.95	1.96	1.97	1.97	1.98	1.99	2.00	2.01	2.02
	+1	33.8	-2.112	51.60	PP P_{t7}	53.4	53.1	52.8	52.4	52.1	51.8	51.4	51.1	50.8	50.4	50.1	49.8	49.4	49.1	48.8
					PP EPR	1.67	1.67	1.67	1.67	1.67	1.67	1.67	1.67	1.67	1.67	1.67	1.67	1.67	1.67	1.67
					TO EPR	1.91	1.92	1.92	1.93	1.93	1.94	1.95	1.96	1.97	1.97	1.98	1.99	2.00	2.01	2.02
	+2	35.6	-1.936	51.69	PP P_{t7}	53.1	52.8	52.5	52.1	51.8	51.5	51.1	50.8	50.5	50.1	49.8	49.5	49.1	48.8	48.5
					PP EPR	1.66	1.66	1.66	1.66	1.66	1.66	1.66	1.66	1.66	1.66	1.66	1.66	1.66	1.66	1.66
					TO EPR	1.91	1.92	1.92	1.93	1.93	1.94	1.95	1.96	1.97	1.97	1.98	1.99	2.00	2.01	2.02
STANDARD DAY TRIM	+3	37.4	-1.848	51.78	PP P_{t7}	61.1	60.7	60.4	60.0	59.6	59.2	58.8	58.4	58.1	57.7	57.3	56.9	56.5	56.2	55.8
					PP EPR	1.91	1.91	1.91	1.91	1.91	1.91	1.91	1.91	1.91	1.91	1.91	1.91	1.91	1.91	1.91
					TO EPR	1.91	1.92	1.92	1.93	1.93	1.94	1.95	1.96	1.97	1.97	1.98	1.99	2.00	2.01	2.02
	+4	39.2	-1.672	51.86	PP P_{t7}	60.8	60.4	60.0	59.7	59.3	58.9	58.5	58.1	57.8	57.4	57.0	56.6	56.2	55.9	55.5
					PP EPR	1.90	1.90	1.90	1.90	1.90	1.90	1.90	1.90	1.90	1.90	1.90	1.90	1.90	1.90	1.90
					TO EPR	1.91	1.92	1.92	1.93	1.93	1.94	1.95	1.96	1.97	1.97	1.98	1.99	2.00	2.01	2.02
	+5	41.0	-1.496	51.94	PP P_{t7}	60.5	60.1	59.7	59.3	59.0	58.6	58.2	57.8	57.5	57.1	56.7	56.3	55.9	55.6	55.2
					PP EPR	1.89	1.89	1.89	1.89	1.89	1.89	1.89	1.89	1.89	1.89	1.89	1.89	1.89	1.89	1.89
					TO EPR	1.91	1.92	1.92	1.93	1.93	1.94	1.95	1.96	1.97	1.97	1.98	1.99	2.00	2.01	2.02
	+6	42.8	-1.408	52.03	PP P_{t7}	60.2	59.8	59.4	59.0	58.7	58.3	57.9	57.5	57.2	56.8	56.4	56.0	55.6	55.3	54.9
					PP EPR	1.88	1.88	1.88	1.88	1.88	1.88	1.88	1.88	1.88	1.88	1.88	1.88	1.88	1.88	1.88
					TO EPR	1.91	1.92	1.92	1.93	1.93	1.94	1.95	1.96	1.97	1.97	1.98	1.99	2.00	2.01	2.02
	+7	44.6	-1.232	52.10	PP P_{t7}	59.8	59.5	59.1	58.7	58.3	58.0	57.6	57.2	56.8	56.5	56.1	55.7	55.4	55.0	54.6
					PP EPR	1.87	1.87	1.87	1.87	1.87	1.87	1.87	1.87	1.87	1.87	1.87	1.87	1.87	1.87	1.87
					TO EPR	1.91	1.92	1.92	1.93	1.93	1.94	1.95	1.96	1.97	1.97	1.98	1.99	2.00	2.01	2.02
	+8	46.4	-1.144	52.19	PP P_{t7}	59.5	59.1	58.8	58.4	58.0	57.7	57.3	56.9	56.5	56.2	55.8	55.4	55.1	54.7	54.3
					PP EPR	1.86	1.86	1.86	1.86	1.86	1.86	1.86	1.86	1.86	1.86	1.86	1.86	1.86	1.86	1.86
					TO EPR	1.91	1.92	1.92	1.93	1.93	1.94	1.95	1.96	1.97	1.97	1.98	1.99	2.00	2.01	2.02
	+9	48.2	-.968	52.27	PP P_{t7}	59.2	58.8	58.5	58.1	57.7	57.4	57.0	56.6	56.2	55.9	55.5	55.1	54.8	54.4	54.0
					PP EPR	1.85	1.85	1.85	1.85	1.85	1.85	1.85	1.85	1.85	1.85	1.85	1.85	1.85	1.85	1.85
					TO EPR	1.91	1.92	1.92	1.93	1.93	1.94	1.95	1.96	1.97	1.97	1.98	1.99	2.00	2.01	2.01
	+10	50.0	-.792	52.35	PP P_{t7}	59.2	58.8	58.5	58.1	57.7	57.4	57.0	56.6	56.2	55.9	55.5	55.1	54.8	54.4	54.0
					PP EPR	1.85	1.85	1.85	1.85	1.85	1.85	1.85	1.85	1.85	1.85	1.85	1.85	1.85	1.85	1.85
					TO EPR	1.91	1.92	1.92	1.93	1.93	1.94	1.95	1.96	1.97	1.97	1.98	1.99	2.00	2.01	2.01
	+11	51.8	-.616	52.43	PP P_{t7}	58.9	58.5	58.1	57.8	57.4	57.0	56.7	56.3	55.9	55.6	55.2	54.8	54.5	54.1	53.7
					PP EPR	1.84	1.84	1.84	1.84	1.84	1.84	1.84	1.84	1.84	1.84	1.84	1.84	1.84	1.84	1.84
					TO EPR	1.91	1.92	1.92	1.93	1.93	1.94	1.95	1.96	1.97	1.97	1.98	1.99	2.00	2.00	2.00
	+12	53.6	-.440	52.50	PP P_{t7}	58.6	58.2	57.8	57.5	57.1	56.7	56.4	56.0	55.6	55.3	54.9	54.5	54.2	53.8	53.4
					PP EPR	1.83	1.83	1.83	1.83	1.83	1.83	1.83	1.83	1.83	1.83	1.83	1.83	1.83	1.83	1.83
					TO EPR	1.91	1.92	1.92	1.93	1.93	1.94	1.95	1.96	1.97	1.97	1.98	1.99	1.99	1.99	1.99
	+13	55.4	-.352	52.58	PP P_{t7}	58.2	57.9	57.5	57.1	56.8	56.4	56.1	55.7	55.3	55.0	54.6	54.2	53.9	53.5	53.1
					PP EPR	1.82	1.82	1.82	1.82	1.82	1.82	1.82	1.82	1.82	1.82	1.82	1.82	1.82	1.82	1.82
					TO EPR	1.91	1.92	1.92	1.93	1.93	1.94	1.95	1.96	1.97	1.97	1.98	1.99	1.99	1.99	1.99
	+14	57.2	-.176	52.66	PP P_{t7}	57.9	57.6	57.2	56.8	56.5	56.1	55.7	55.4	55.0	54.7	54.3	53.9	53.6	53.2	52.9
					PP EPR	1.81	1.81	1.81	1.81	1.81	1.81	1.81	1.81	1.81	1.81	1.81	1.81	1.81	1.81	1.81
					TO EPR	1.91	1.92	1.92	1.93	1.93	1.94	1.95	1.96	1.97	1.97	1.98	1.98	1.98	1.98	1.98
	+15	59.0	0	52.75	PP P_{t7}	57.6	57.2	56.9	56.5	56.2	55.8	55.4	55.1	54.7	54.4	54.0	53.6	53.3	52.9	52.6
					PP EPR	1.80	1.80	1.80	1.80	1.80	1.80	1.80	1.80	1.80	1.80	1.80	1.80	1.80	1.80	1.80
					TO EPR	1.91	1.92	1.92	1.93	1.93	1.94	1.95	1.96	1.97	1.97	1.98	1.98	1.98	1.98	1.98
	+16	60.8	.176	52.83	PP P_{t7}	57.3	56.9	56.6	56.2	55.8	55.5	55.1	54.8	54.4	54.1	53.7	53.3	53.0	52.6	52.3
					PP EPR	1.79	1.79	1.79	1.79	1.79	1.79	1.79	1.79	1.79	1.79	1.79	1.79	1.79	1.79	1.79
					TO EPR	1.91	1.92	1.92	1.93	1.93	1.94	1.95	1.96	1.97	1.97	1.98	1.98	1.98	1.98	1.98
	+17	62.6	.352	52.91	PP P_{t7}	57.0	56.6	56.2	55.9	55.5	55.2	54.8	54.5	54.1	53.8	53.4	53.0	52.7	52.3	52.0
					PP EPR	1.78	1.78	1.78	1.78	1.78	1.78	1.78	1.78	1.78	1.78	1.78	1.78	1.78	1.78	1.78
					TO EPR	1.91	1.92	1.92	1.93	1.93	1.94	1.95	1.96	1.97	1.97	1.98	1.98	1.98	1.98	1.98
	+18	64.4	.440	52.99	PP P_{t7}	57.0	56.6	56.2	55.9	55.5	55.2	54.8	54.5	54.1	53.8	53.4	53.0	52.7	52.3	52.0
					PP EPR	1.78	1.78	1.78	1.78	1.78	1.78	1.78	1.78	1.78	1.78	1.78	1.78	1.78	1.78	1.78
					TO EPR	1.91	1.92	1.92	1.93	1.93	1.94	1.95	1.96	1.97	1.97	1.98	1.98	1.98	1.98	1.98
	+19	66.2	.616	53.07	PP P_{t7}	56.6	56.3	55.9	55.5	55.2	54.9	54.5	54.2	53.8	53.5	53.1	52.7	52.4	52.0	51.7
					PP EPR	1.77	1.77	1.77	1.77	1.77	1.77	1.77	1.77	1.77	1.77	1.77	1.77	1.77	1.77	1.77
					TO EPR	1.91	1.92	1.92	1.93	1.93	1.94	1.95	1.96	1.97	1.97	1.98	1.98	1.98	1.98	1.98

Static Thrust Power Settings
(0 To 5000 Feet Pressure Altitude)
JT8D-7 Engine
Figure 6-11

E. Connect the precision Pt7 gage and precision tachometer (see Figure 6-12).

F. Connect remote trim equipment (see Figure 6-9).

If remote trim equipment is not available, the trim screws may be adjusted manually, adhering to accepted safety precautions.

At this time there should be on the aircraft flight deck the precision Pt7 gage, precision tachometer, and the remote trim box.

G. Start the engine and stabilize at idle.

H. Accelerate the engine from idle to the part power trim stop five times and stabilize at idle. This procedure exercises the F.C.U. and minimizes hysteresis.

I. Observe the N2 speed on the precision tachometer, and utilizing the remote trim box adjust "idle trim" as necessary to attain the idle speed determined in paragraph 6-8, C 1. Always attempt to set the target value. The final adjustment should always be in the increase direction.

J. Check for proper compressor bleed valve operation by slowly advancing the power lever until a sudden increase in EPR is noted. This increase is approximately .05 EPR units and it indicates that the valves have closed. Record N1% RPM at closure and compare with Bleed Valve Operating Curve (Figure 6-13). After the closure point has been ascertained to be correct, slowly retard the throttle until the bleeds open. This will be evidenced by a sudden decrease in EPR units (approximately .05). Refer to Curve at bleed opening % N1 value and record opening % RPM value.

K. Advance the power lever until the part power trim stop is contacted and allow a stabilization period of four to five minutes.

L. Observe the value of Pt7 "HgA on the precision Pt7 gage. If Pt7 "HgA is not the target value determined in paragraph 6-8, C 2, activate the remote trim box until the target value is attained. Always attempt to set the target value while trimming in the <u>increase</u> direction. At this time the aircraft EPR indicator should read the value 1.78 units determined in paragraph 6-8, C 3.

M. Retard the power lever to the idle position and recheck idle N2 speed.

NOTE: More than one trim adjustment may be required as the idle and mil adjustments affect each other. If adjustments are necessary at either idle or part power, the other should be rechecked.

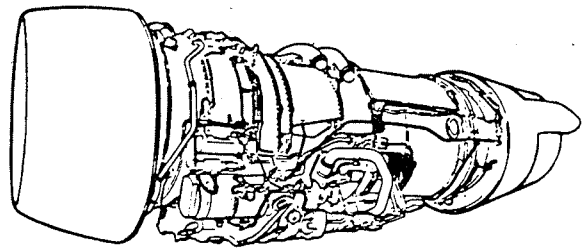

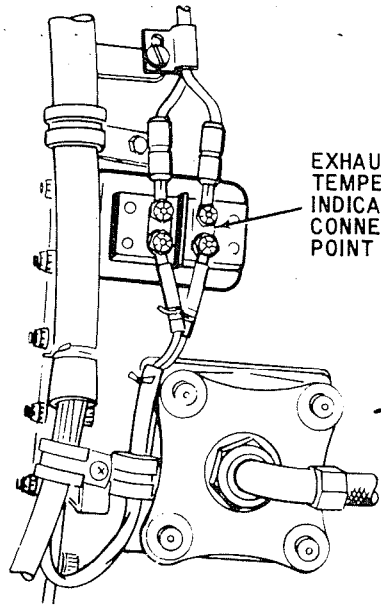

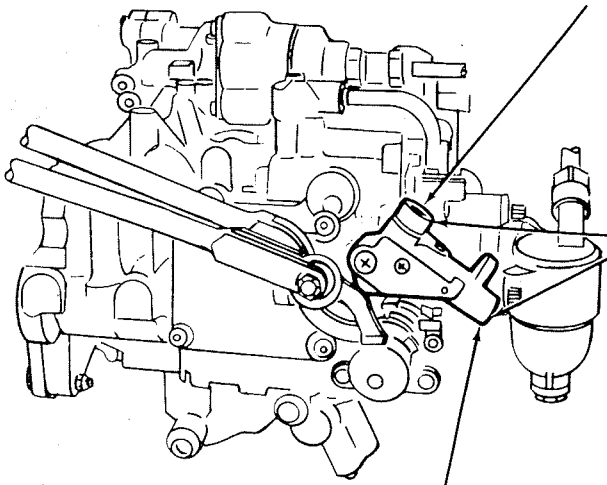

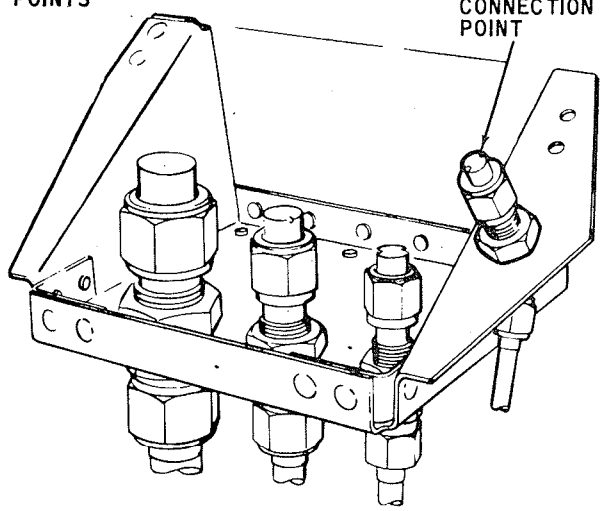

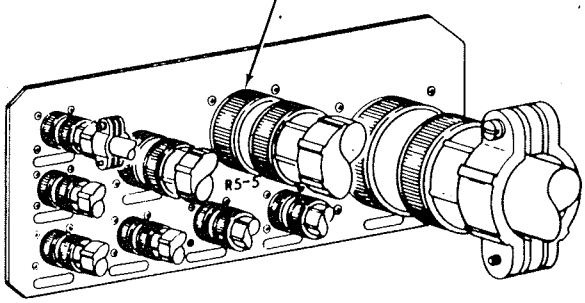

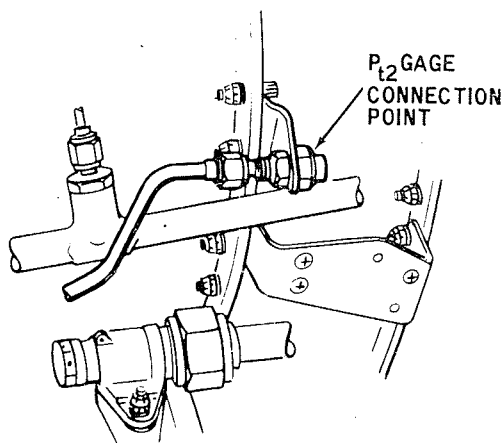

TEST FITTINGS (DC9)

Figure 6-12

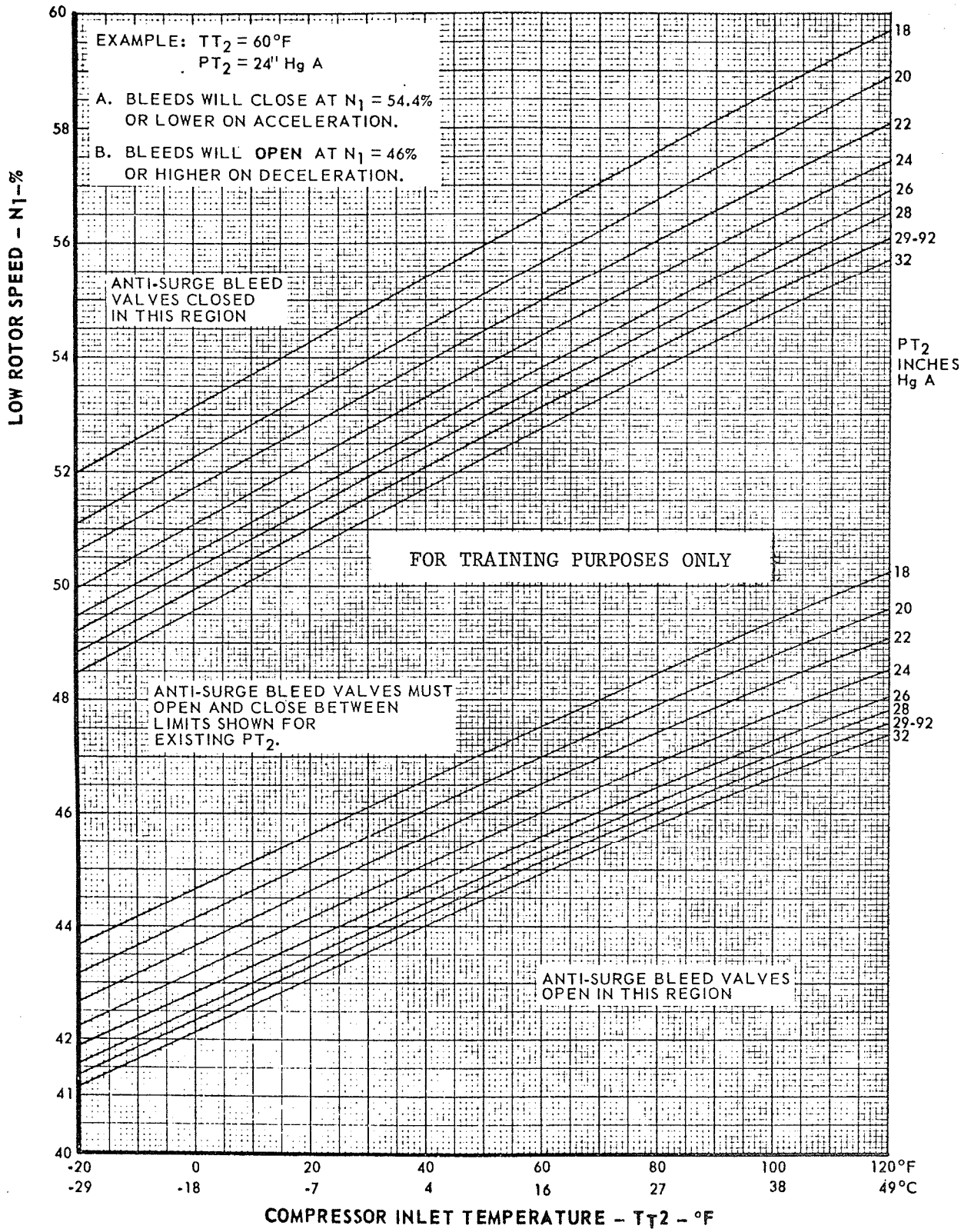

COMPRESSOR BLEED VALVE SCHEDULE

Figure 6-13

N. After setting the idle and part power trim targets within the tolerances in paragraphs 6-8, C 1 and C 2, remove the trim equipment and return the part power stop to its normal or "stowed" position (see Figure 6-1).

O. Advance the power lever to the target take-off EPR value (1.97 units) determined in paragraph 6-8, C 4. This EPR value should be attained with less than full power lever travel while all engine operating parameters are within limits.

P. Retard power lever to idle, stabilize and shutdown in accordance with the Douglas Maintenance Manual instructions.

This completes the Douglas DC-9 Trim Procedure.

SECTION VII

DATA PLATE SPEED CHECK

SECTION VII

DATA PLATE SPEED CHECK

7-1. GENERAL

It must be recognized that JT8D turbofan engines which have accumulated thousands of hours of service time do not produce thrust as efficiently as they did when they were new. This characteristic is commonly referred to as deterioration. Changes in airfoil contours due to prolonged exposure to high temperatures, pressures and contamination, make a certain amount of performance deterioration inevitable. When deterioration becomes excessive, exhaust gas temperatures rise, compressor stall margin decreases and fuel consumption increases.

7-2. EFFECTS OF EXCESSIVE DETERIORATION

The amount of deterioration must be kept to a minimum because day-to-day operation can be adversely affected. Deterioration can cause the exhaust gas temperature increase or the compressor surge margin decrease to exceed the values that were determined in establishing the certified EGT limits and the compressor operating lines. Day-to-day operations are not affected as drastically by high fuel consumption as they are by excessive EGT and reduced stall margin. However, the additional fuel costs incurred by operating badly deteriorated engines can be enormous.

7-3. PARAMETER DUPLICATION

The gas turbine engine has the inherent ability to repeatedly duplicate its operating parameters on a day-to-day basis as long as its condition remains essentially unchanged. This unique trait can be exploited to provide warning that the engine's condition has changed.

7-4. DATA PLATE SPEED CHECK

A. Pratt & Whitney Aircraft has provided a ground running procedure that permits periodic determination of JT8D performance. This procedure is called the "Data Plate Speed Check." It is also referred to in the field as the "Engine Condition Check" or the "1.65 EPR Check."

B. Data Plate Speed is a reference high pressure compressor (N2) speed. Specifically, Data Plate Speed is the N2 speed required to produce 1.65 EPR under sea level standard day conditions, when the engine is new or newly overhauled. An engine's Data Plate Speed then, is initially determined during the acceptance or post overhaul test run.

C. Since no two engine gaspaths are exactly the same because of manufacturing tolerances, the N2 speed required to produce 1.65 EPR on a sea level standard day will vary from engine to engine. Thus, it will be rare when two engines installed on any aircraft have precisely the same Data Plate Speed.

D. An engine's Data Plate Speed becomes a permanent entry in the engine log. A data plate is secured to the engine citing the N2 RPM and percent of N2 RPM that was required to produce 1.65 EPR on a standard day. (See Figure 7-1 Boeing, 7-2 Douglas.)

7-5. DATA PLATE SPEED CHECK UTILIZATION

A. Maintenance and Engineering personnel can utilize Data Plate Speed as a reference to determine if significant gaspath deterioration has occurred over the accrued engine operating time.

B. For example: As the N2 speed required to produce 1.65 EPR on a standard day when the engine was new is known, Maintenance can, utilizing the "Data Plate Speed Check," determine how much N2 speed is currently required to produce the same 1.65 EPR after the engine has accrued many operating hours. Any observed variations in N2 from the data plate value are indications of possible significant gaspath deterioration.

7-6. ANALYZING GASPATH DETERIORATION

As a guide for analyzing gaspath deterioration, the following general rules can be applied when performing the Data Plate Speed Check.

A. Divide the engine into two sections by passing a plane through the diffuser case (see Figure 7-3).

That section forward of the plane is defined as the engine "Cold Section" while that section of the engine aft of the plane is called the "Hot Section."

B. Cold Section deterioration is generally accompanied by an increase in compressor RPM for a fixed EPR (1.65).

BOEING 727 TRIM TABLE

BAROMETER, INCHES OF MERCURY				29.3	29.4	29.5	29.6	29.7	29.8	29.9	30.0	30.1	30.2	30.3	30.4	30.5	30.6
OAT °F	DATA PLATE CORR. %N2	IDLE %N2 NO.1+3 (NO.2)	DATA PLATE NO. 1+3	48.3	48.5	48.7	48.8	[illegible]	[illegible]	[illegible]	[illegible]	[illegible]	49.8	50.0	50.2	50.3	50.5
			PT7 NO. 2	47.8	48.0	48.1	48.3	[illegible]	[illegible]	[illegible]	[illegible]	[illegible]	[illegible]	49.4	49.6	49.7	49.9
18	-3.60	55.3 (53.3)	NO. 1+3 PP PT7	58.4	58.6	58.8	59.0	[illegible]	[illegible]	[illegible]	[illegible]	[illegible]	[illegible]	52.5	52.6	52.3	53.0
			NO. 2 PP PT7	57.4	57.6	57.8	58.0	[illegible]	[illegible]	[illegible]	[illegible]	[illegible]	[illegible]	51.8	52.0	52.2	52.3
			NO. 1,2,3 PP EPR	1.99	1.99	1.99	1.99	[illegible]	[illegible]	[illegible]	[illegible]	[illegible]	[illegible]	[illegible]	* 1.73	* 1.73	* 1.73
			NO. 1,2,3 TO EPR	2.01	2.01	2.00	2.00	[illegible]	[illegible]	[illegible]	[illegible]	[illegible]	[illegible]	[illegible]	[illegible]	1.96	1.96
			NO. 2 PP PT7/PAM	1.96	1.96	1.96	1.96	[illegible]	[illegible]	[illegible]	[illegible]	[illegible]	[illegible]	[illegible]	[illegible]	[illegible]	[illegible]
20	-3.42	55.4 (53.4)	NO. 1+3 PP PT7	58.1	58.3	58.5	58.7	58.9	[illegible]	[illegible]	[illegible]	[illegible]	[illegible]	[illegible]	[illegible]	[illegible]	[illegible]
			NO. 2 PP PT7	57.2	57.4	57.6	57.8	58.0	[illegible]	[illegible]	[illegible]	[illegible]	[illegible]	[illegible]	[illegible]	[illegible]	[illegible]
			NO. 1,2,3 PP EPR	1.98	1.98	1.98	1.98	1.98	[illegible]	[illegible]	[illegible]	[illegible]	[illegible]	[illegible]	[illegible]	[illegible]	[illegible]
			NO. 1,2,3 TO EPR	2.01	2.01	2.00	2.00	1.99	1.99	[illegible]	[illegible]	[illegible]	[illegible]	[illegible]	[illegible]	[illegible]	[illegible]
			NO. 2 PP PT7/PAM	1.95	1.95	1.95	1.95	1.95	1.95	[illegible]	[illegible]	[illegible]	[illegible]	[illegible]	[illegible]	[illegible]	[illegible]
22	-3.25	55.5 (53.5)	NO. 1+3 PP PT7	57.9	58.1	58.3	58.5	58.7	58.9	[illegible]	[illegible]	[illegible]	[illegible]	[illegible]	[illegible]	[illegible]	[illegible]
			NO. 2 PP PT7	57.0	57.2	57.4	57.6	57.8	58.0	[illegible]	[illegible]	[illegible]	[illegible]	[illegible]	[illegible]	[illegible]	[illegible]
			NO. 1,2,3 PP EPR	1.98	1.98	1.98	1.98	1.98	1.98	1.98	[illegible]	[illegible]	[illegible]	[illegible]	[illegible]	[illegible]	1.72
			NO. 1,2,3 TO EPR	2.01	2.01	2.00	2.00	1.99	1.99	1.98	1.98	[illegible]	[illegible]	[illegible]	1.96	1.96	1.96
			NO. 2 PP PT7/PAM	1.95	1.95	1.95	1.95	1.95	1.95	1.95	[illegible]	[illegible]	[illegible]	1.70	1.70	1.70	1.70
24	-3.07	[illegible] (53.6)	NO. 1+3 PP PT7	57.6	57.8	58.0	58.2	58.4	[illegible]	[illegible]	[illegible]	59.2	59.4	59.6	52.0	52.2	52.4
			NO. 2 PP PT7	56.8	57.0	57.2	57.4	[illegible]	[illegible]	[illegible]	58.1	58.3	58.5	58.7	51.4	51.5	51.7
			NO. 1,2,3 PP EPR	1.97	1.97	[illegible]	[illegible]	[illegible]	1.97	1.97	1.97	1.97	1.97	1.97	* 1.71	* 1.71	* 1.71
			NO. 1,2,3 TO EPR	2.01	2.01	2.00	2.00	1.99	1.99	1.98	1.98	1.97	1.97	1.97	1.96	1.96	1.96
			NO. 2 PP PT7/PAM	1.94	1.94	1.94	1.94	1.94	1.94	1.94	1.94	1.94	1.94	1.94	1.69	1.69	1.69

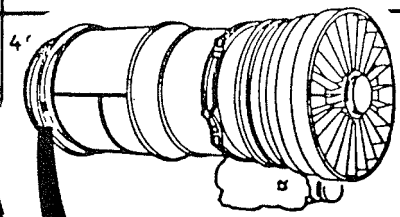

ENGINE SERIAL NO.

P653541B

SPEED DATA AT 60°F

N_2 10,881 88.83%

NOTE: N_2 SPEED DATA WILL VARY PER ENGINE

* USE COLD WEATHER PART POWER TRIM STOP

FOR TARGETS TO -RIGHT OF "STAGGERED" LINE USE "C" STOP
- LEFT OF "STAGGERED" LINE USE "S" STOP

Figure 7-1

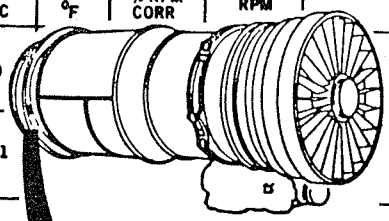

ENGINE SERIAL NO.

P653541B

SPEED DATA AT 60°F

N_2 10,881 88.83%

NOTE: N_2 SPEED DATA WILL VARY PER ENGINE

	TEMPERATURE °C	TEMPERATURE °F	DATA PLATE % RPM CORR	IDLE % N2 RPM		32.0	31.8	31.6	31.4	31.2	31.0	30.8	30.6	30.4	30.2	30.0	29.8	29.6	29.4	29.2
COLD DAY TRIM STOP	0					53.4	53.1	52.8	52.4	52.1	51.8	51.4	51.1	50.8	50.4	50.1	49.8	49.4	49.1	48.8
						1.67	1.67	1.67	1.67	1.67	1.67	1.67	1.67	1.67	1.67	1.67	1.67	1.67	1.67	1.67
						1.91	1.92	1.92	1.93	1.93	1.94	1.95	1.96	1.97	1.97	1.98	1.99	2.00	2.01	2.02
	+1					53.4	53.1	52.8	52.4	52.1	51.8	51.4	51.1	50.8	50.4	50.1	49.8	49.4	49.1	48.8
						1.67	1.67	1.67	1.67	1.67	1.67	1.67	1.67	1.67	1.67	1.67	1.67	1.67	1.67	1.67
						1.91	1.92	1.92	1.93	1.93	1.94	1.95	1.96	1.97	1.97	1.98	1.99	2.00	2.01	2.02
	+2					53.1	52.8	52.5	52.1	51.8	51.5	51.1	50.8	50.5	50.1	49.8	49.5	49.1	48.8	48.5
						1.66	1.66	1.66	1.66	1.66	1.66	1.66	1.66	1.66	1.66	1.66	1.66	1.66	1.66	1.66
						1.91	1.92	1.92	1.93	1.93	1.94	1.95	1.96	1.97	1.97	1.98	1.99	2.00	2.01	2.02
	+3	3[illegible]				61.1	60.7	60.4	60.0	59.6	59.2	58.8	58.4	58.1	57.7	57.3	56.9	56.5	56.2	55.8
						[illegible]	[illegible]	[illegible]	[illegible]	[illegible]	[illegible]	[illegible]	1.91	1.91	1.91	1.91	1.91	1.91	1.91	1.91
						[illegible]	[illegible]	[illegible]	[illegible]	[illegible]	[illegible]	[illegible]	1.96	1.97	1.97	1.98	1.99	2.00	2.01	2.02
	+4	39.2	-1[illegible]			[illegible]	[illegible]	[illegible]	[illegible]	[illegible]	[illegible]	[illegible]	[illegible]	57.8	57.4	57.0	56.6	56.2	55.9	55.5
						[illegible]	[illegible]	[illegible]	[illegible]	[illegible]	[illegible]	[illegible]	[illegible]	1.90	1.90	1.90	1.90	1.90	1.90	1.90
						[illegible]	[illegible]	[illegible]	[illegible]	[illegible]	[illegible]	[illegible]	[illegible]	1.97	1.97	1.98	1.99	2.00	2.01	2.02
	+5	41.0	-1.496			[illegible]	[illegible]	[illegible]	[illegible]	[illegible]	[illegible]	[illegible]	[illegible]	57.5	57.1	56.7	56.3	55.9	55.6	55.2
						[illegible]	[illegible]	[illegible]	[illegible]	[illegible]	[illegible]	[illegible]	[illegible]	1.89	1.89	1.89	1.89	1.89	1.89	1.89
						[illegible]	[illegible]	[illegible]	[illegible]	[illegible]	[illegible]	[illegible]	[illegible]	1.97	1.97	1.98	1.99	2.00	2.01	2.02
	+6	42.8	-1.408			[illegible]	[illegible]	[illegible]	[illegible]	[illegible]	[illegible]	[illegible]	[illegible]	[illegible]	56.8	56.4	56.0	55.6	55.3	54.9
						[illegible]	[illegible]	[illegible]	[illegible]	[illegible]	[illegible]	[illegible]	[illegible]	[illegible]	1.88	1.88	1.88	1.88	1.88	1.88
						[illegible]	[illegible]	[illegible]	[illegible]	[illegible]	[illegible]	[illegible]	[illegible]	[illegible]	1.97	1.98	1.99	2.00	2.01	2.02
	+7	44.6	-1.232			[illegible]	[illegible]	[illegible]	[illegible]	[illegible]	[illegible]	[illegible]	[illegible]	[illegible]	56.5	56.1	55.7	55.4	55.0	54.6
						[illegible]	[illegible]	[illegible]	[illegible]	[illegible]	[illegible]	[illegible]	[illegible]	[illegible]	1.87	1.87	1.87	1.87	1.87	1.87
						[illegible]	[illegible]	[illegible]	[illegible]	[illegible]	[illegible]	[illegible]	[illegible]	[illegible]	1.97	1.98	1.99	2.00	2.01	2.02
	+8	46.4	-1.144	[illegible]		[illegible]	[illegible]	[illegible]	[illegible]	[illegible]	[illegible]	57.3	[illegible]	[illegible]	56.2	55.8	55.4	55.1	54.7	54.3
						[illegible]	[illegible]	[illegible]	[illegible]	[illegible]	1.86	1.86	[illegible]	[illegible]	1.86	1.86	1.86	1.86	1.86	1.86
						[illegible]	[illegible]	[illegible]	[illegible]	1.93	1.94	1.95	[illegible]	[illegible]	1.97	1.98	1.99	2.00	2.01	2.02
	+9	48.2	-.968	52.27	PP P_{t7}	59.2	58.8	58.5	58.1	57.7	57.4	57.0	[illegible]	[illegible]	56.2	55.9	55.5	55.1	54.8	54.4	54.0
					PP EPR	1.85	1.85	1.85	1.85	1.85	1.85	1.85	[illegible]	[illegible]	1.85	1.85	1.85	1.85	1.85	1.85	1.85
					TO EPR	1.91	1.92	1.92	1.93	1.93	1.94	1.95	[illegible]	[illegible]	1.97	1.97	1.98	1.99	2.00	2.01	2.01
	+10	50.0	-.792	52.35	PP P_{t7}	59.2	58.8	58.5	58.1	57.7	57.4	57[illegible]	[illegible]	[illegible]	56.2	55.9	55.5	55.1	54.8	54.4	54.0
					PP EPR	1.85	1.85	1.85	1.85	1.85	1.85	1[illegible]	[illegible]	[illegible]	1.85	1.85	1.85	1.85	1.85	1.85	1.85
					TO EPR	1.91	1.92	1.92	1.93	1.93	1.94	1[illegible]	[illegible]	[illegible]	1.97	1.97	1.98	1.99	2.00	2.01	2.01
	+11	51.8	-.616	52.43	PP P_{t7}	58.9	58.5	58.1	57.8	57.4	57.0	[illegible]	[illegible]	56.3	55.9	55.6	55.2	54.8	54.5	54.1	53.7
					PP EPR	1.84	1.84	1.84	1.84	1.84	1.84	[illegible]	[illegible]	1.84	1.84	1.84	1.84	1.84	1.84	1.84
					TO EPR	1.91	1.92	1.92	1.93	1.93	1.9[illegible]	[illegible]	[illegible]	1.96	1.97	1.97	1.98	1.99	2.00	2.00	2.00
	+12	53.6	-.440	52.50	PP P_{t7}	58.6	58.2	57.8	57.5	57.1	5[illegible]	[illegible]	56.4	56.0	55.6	55.3	54.9	54.5	54.2	53.8	53.4
					PP EPR	1.83	1.83	1.83	1.83	1.83	[illegible]	[illegible]	1.83	1.83	1.83	1.83	1.83	1.83	1.83	1.83	1.83
					TO EPR	1.91	1.92	1.92	1.93	1.93	[illegible]	[illegible]	1.95	1.96	1.97	1.97	1.98	1.99	1.99	1.99	1.99
	+13	55.4	-.352	52.58	PP P_{t7}	58.2	57.9	57.5	57.1	56[illegible]	56.4	56.1	55.7	55.3	55.0	54.6	54.2	53.9	53.5	53.1
					PP EPR	1.82	1.82	1.82	1.82	[illegible]	1.82	1.82	1.82	1.82	1.82	1.82	1.82	1.82	1.82	1.82
					TO EPR	1.91	1.92	1.92	1.93	[illegible]	1.94	1.95	1.96	1.97	1.97	1.98	1.99	1.99	1.99	1.99
	+14	57.2	-.176	52.66	PP P_{t7}	57.9	57.6	57.2	56[illegible]	56.5	56.1	55.7	55.4	55.0	54.7	54.3	53.9	53.6	53.2	52.9
					PP EPR	1.81	1.81	1.81	[illegible]	1.81	1.81	1.81	1.81	1.81	1.81	1.81	1.81	1.81	1.81	1.81
					TO EPR	1.91	1.92	1.92	[illegible]	1.93	1.94	1.95	1.96	1.97	1.97	1.98	1.98	1.98	1.98	1.98
	+15	59.0	0	52.75	PP P_{t7}	57.6	57.2	[illegible]	56.5	56.2	55.8	55.4	55.1	54.7	54.4	54.0	53.6	53.3	52.9	52.6
					PP EPR	1.80	1.80	[illegible]	1.80	1.80	1.80	1.80	1.80	1.80	1.80	1.80	1.80	1.80	1.80	1.80
					TO EPR	1.91	[illegible]	1.92	1.93	1.93	1.94	1.95	1.96	1.97	1.97	1.98	1.98	1.98	1.98	1.98
	+16	60.8	.176	52.83	PP P_{t7}	57.[illegible]	56.9	56.6	56.2	55.8	55.5	55.1	54.8	54.4	54.1	53.7	53.3	53.0	52.6	52.3
					PP EPR	[illegible]	1.79	1.79	1.79	1.79	1.79	1.79	1.79	1.79	1.79	1.79	1.79	1.79	1.79	1.79
					TO EPR	1.91	1.92	1.92	1.93	1.93	1.94	1.95	1.96	1.97	1.97	1.98	1.98	1.98	1.98	1.98
	+17	62.6	.352	52.91	PP P_{t7}	57.0	56.6	56.2	55.9	55.5	55.2	54.8	54.5	54.1	53.8	53.4	53.0	52.7	52.3	52.0
					PP EPR	1.78	1.78	1.78	1.78	1.78	1.78	1.78	1.78	1.78	1.78	1.78	1.78	1.78	1.78	1.78
					TO EPR	1.91	1.92	1.92	1.93	1.93	1.94	1.95	1.96	1.97	1.97	1.98	1.98	1.98	1.98	1.98
	+18	64.4	.440	52.99	PP P_{t7}	57.0	56.6	56.2	55.9	55.5	55.2	54.8	54.5	54.1	53.8	53.4	53.0	52.7	52.3	52.0
					PP EPR	1.78	1.78	1.78	1.78	1.78	1.78	1.78	1.78	1.78	1.78	1.78	1.78	1.78	1.78	1.78
					TO EPR	1.91	1.92	1.92	1.93	1.93	1.94	1.95	1.96	1.97	1.97	1.98	1.98	1.98	1.98	1.98
	+19	66.2	.616	53.07	PP P_{t7}	56.6	56.3	55.9	55.5	55.2	54.9	54.5	54.2	53.8	53.5	53.1	52.7	52.4	52.0	51.7
					PP EPR	1.77	1.77	1.77	1.77	1.77	1.77	1.77	1.77	1.77	1.77	1.77	1.77	1.77	1.77	1.77
					TO EPR	1.91	1.92	1.92	1.93	1.93	1.94	1.95	1.96	1.97	1.97	1.98	1.98	1.98	1.98	1.98

STANDARD DAY TRIM

Static Thrust Power Settings
(0 To 5000 Feet Pressure Altitude)
JT8D-7 Engine

Figure 7-2

ENGINE HOT SECTION & COLD SECTION DEFINITION

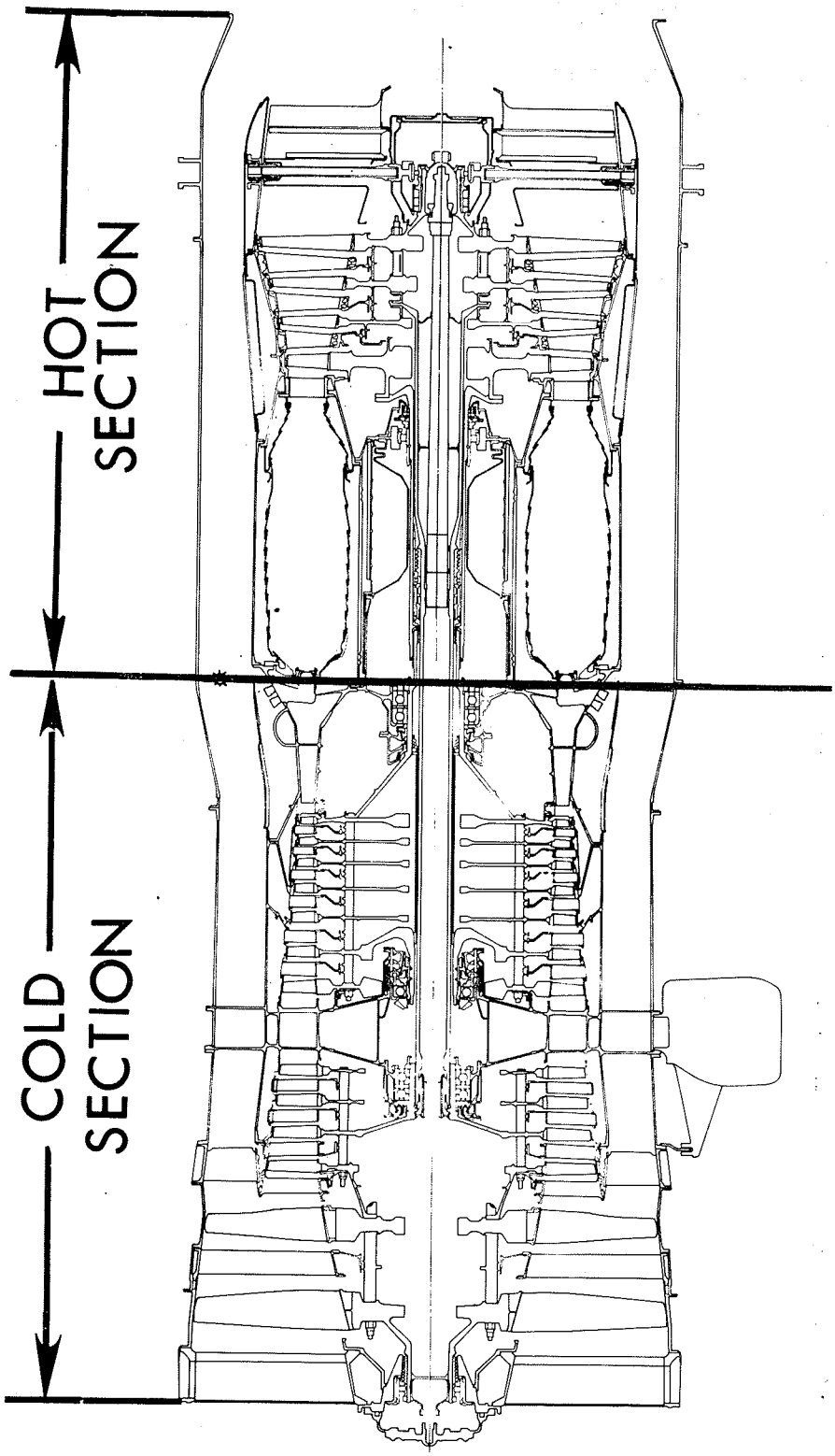

Figure 7-3

C. Hot Section deterioration is generally accompanied by a decrease in compressor RPM for a fixed EPR (1.65).

D. In both cases an increase in fuel flow and exhaust gas temperature (EGT) can be expected.

7-7. DATA PLATE CHECK (Detailed Example)

A. General

There now follows a detailed example "Data Plate Speed Check" that is relevant to both the Boeing 727, 737, and Douglas DC-9 aircraft. The procedure is identical for all installations with one exception. This exception is noted with an asterisk in paragraph 7-7, F.

The figures which apply to the DC-9 appear in parentheses.

As in the case of F.C.U. trimming, it is imperative that the existing ambient conditions be accurately determined, and the relative wind conditions as well as bleed and power extraction be noted.

B. Assume the following prevailing ambient conditions:

Tam = 24°F (18°C, 64.4°F)
Pam = 29.6 "HgA (30.4 "HgA)

C. From the engine data plate or the engine log, determine the engine's Data Plate Speed. (See Figures 7-1 and 7-2.)

Assume a Data Plate Speed = 88.83% N2.

D. Determine from the "Data Plate % RPM Correction" column in Figure 7-1 and 7-2 the RPM correction for a 24°F day (Boeing Table), and 18°C or 64.4°F day (Douglas Table).

Find: -3.07% N2 (Boeing) (+.44% N2) (Douglas)

E. Applying the correction factor determined in paragraph 7-7, D, we arrive at the computed data plate speed.

Engine Data Plate Speed	=	88.83% N2	(88.83% N2)
Correction Factor	=	-3.07% N2	(+.44% N2)
Computed Data Plate Speed	=	85.76% N2	(89.27% N2)

NOTE: In this example, Computed Data Plate Speed is the N2 speed that would have been required to produce 1.65 EPR on a 24°F day or a 64.4°F when the engine was new or newly overhauled.

F. Determine Data Plate Pt7 "HgA.

From the Boeing Table (Figure 7-1) find the Data Plate Pt7 = 48.8 "HgA. When the data plate Pt7 of 48.8 "HgA is divided by the field barometric pressure of 29.6 "HgA, the resultant yields an EPR of 1.65.

*To determine the data plate Pt7 "HgA for the Douglas DC-9 perform the following calculation:

Data Plate Pt7 = 1.65 x Pam
" " " = 1.65 x 30.4 "HgA
" " " = 50.2 "HgA

G. Install the precision Pt7 gage (see Figure 6-7 Boeing, and 6-12 Douglas).

H. Start the engine and advance the power lever to attain the data plate Pt7 which will be read on the precision Pt7 gage (48.8 "HgA Boeing, 50.2 "HgA Douglas). The engine EPR indicator should now read 1.65 units.

I. Stabilize at the data plate Pt7 and record the observed N2 speed in %.

Assume an observed N2 of 92.5%.

J. Compare the observed N2 speed to the Computed Data Plate Speed ± the maintenance manual tolerances given below in paragraph 7-7, K.

K. Apply maintenance manual tolerances to the Computed Data Plate Speed determined in paragraph 7-7, E.

Tolerances: + 1.22% N2
- 0.87% N2

Computed Data Plate Speed	85.76% N2	(89.27% N2)
	+1.22	+1.22
1) Maximum Desirable N2	86.98%	(90.49%)
Computed Data Plate Speed	85.76% N2	(89.27% N2)
	-0.87	-0.87
2) Minimum Desirable N2	84.89%	(88.40%)

Observed N2 from paragraph 7-7, I = 92.5%

L. Note that the observed N2 of 92.5% is greater than maximum desirable N2 calculated in paragraph 7-7, K 1. This indicates that the N2 compressor is required to turn significantly faster to produce 1.65 EPR than when the engine was new or newly overhauled.

We can conclude from this example that the engine is exhibiting the effects of significant cold section deterioration such as compressor contamination, foreign object damage, or compressor vane and/or blade erosion or damage.

M. Had the observed N2 indicated less than the minimum desirable N2 calculated in paragraph 7-7, K 2, we could have concluded that significant hot section deterioration was present.

SECTION VIII

GROUND PERFORMANCE MONITORING

SECTION VIII

GROUND PERFORMANCE MONITORING

8-1. GENERAL

This section of the handbook outlines the procedures necessary for monitoring the performance of an installed engine.

8-2. PARAMETER CATEGORIES

There are two major categories of parameters normally used in performance monitoring.

A. Performance Parameters
These generally reflect the condition of the engine gaspath, and include such items as, RPM, Fuel Flow, Pressure Ratios, and Exhaust Gas Temperature. Most of these, to be useful, must be corrected to standard day conditions and compared to baseline curves.

B. Mechanical Parameters
These parameters are usually assigned specific limits, and their values need not be corrected to standard day conditions. Typical examples are, oil pressure, oil temperature, oil consumption, breather pressure, and vibration.

8-3. ESTABLISHING PERFORMANCE BASELINE CURVES

A. To be effective, performance monitoring depends on the operator's ability to observe small deviations in each parameter as they occur. To detect these small deviations, each engine's performance must be compared periodically to a set of baselines.

B. Average engine baseline curves can be obtained by plotting a large sampling of corrected engine run data. Average engine performance curves may then be constructed by drawing lines through the average or center of all the individual points. (See Figure 8-1.)

C. Ideally, it is advantageous to use the baseline performance curves that are generated for each engine during production, or post-overhaul test. If the production, or post-overhaul data is not available, then average engine baseline curves should be employed.

ESTABLISHING PERFORMANCE BASELINE CURVES

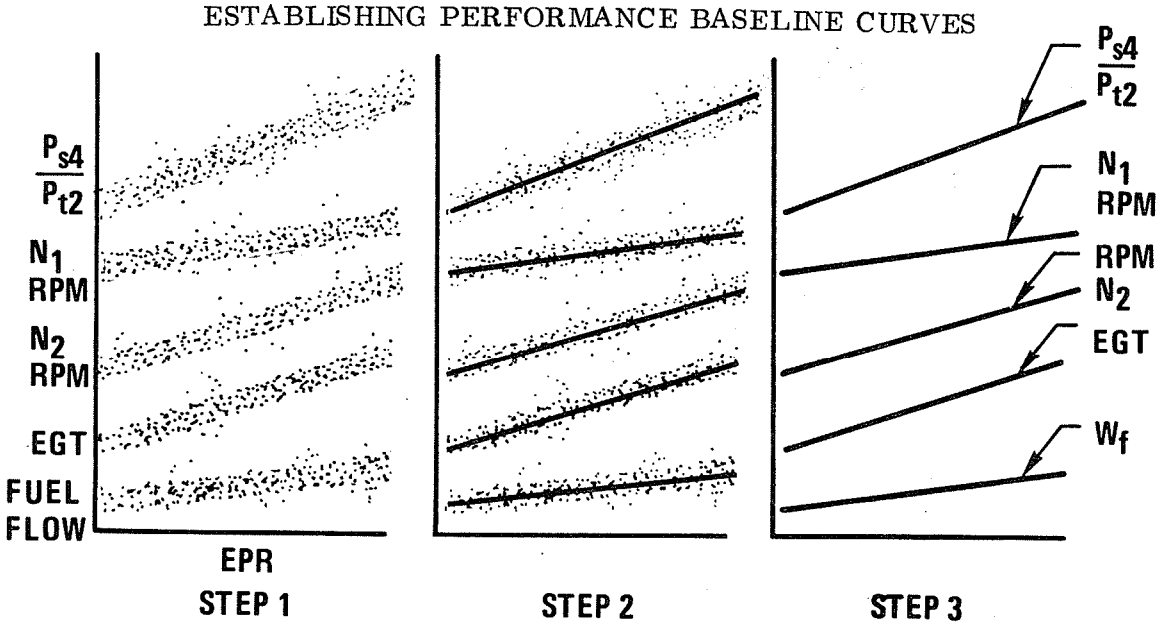

Figure 8-1

8-4. PERFORMANCE DATA CORRECTION

A. The performance parameters of gas turbine engines vary significantly with changes in ambient temperature and pressure. Because of this characteristic, performance data must be corrected to a standard baseline. For this "normalizing" process, an absolute air temperature of 288° Kelvin (15°C) or 519° Rankine (59°F) and an absolute pressure of 29.92 inches of HgA constitute the standard day for correction purposes. Note that °K or °R must be used for correcting gas generator data. This requires adding 273° or 460°, respectively, to the observed temperature value. DO NOT USE °C OR °F DIRECTLY FOR CORRECTIONS.

B. Standard Day Correction Factors

1) δ (Delta) is the correction factor employed in compensating for ambient pressures other than standard (29.92 "HgA).

$$\delta \text{ (Delta)} = \text{Relative Pressure} = \frac{\text{Pam "HgA}}{P_o \text{ "HgA}} = \frac{\text{Pam "HgA}}{29.92 \text{ "HgA}}$$

P_o = International Standard Day Pressure (29.92 "HgA).

Because Pam (uncorrected barometric pressure) is available at all airports it, rather than Pt2, should be used to derive δ (Delta), Relative Pressure, and to calculate desired pressure ratios. In using

Pam rather than Pt2, a small descrepancy in fuel flow correction and a large deviation in pressure ratio calculations will be obtained. However, if Pam is always used, the installation effects on engine performance will be consistent from run to run and valid performance comparisons can be made. However, it is important that the installation losses (inlet ducting, airbleed used, mechanical power absorbed, engine cooling, etc.) remain the same for every run.

NOTE: When the aircraft is stationary, the pressure at the aircraft/engine inlet will be the static field, or uncorrected barometric pressure, and not the barometric pressure corrected to sea level.

Always use the uncorrected barometric pressure to determine the δ (Delta) correction factor.

2) θ (Theta) is the correction factor employed in compensating for ambient temperatures other than standard (519°R or 288°K).

$$\theta \text{ (Theta)} = \text{Relative Temperature} = \frac{\text{Tam } ^{o}\text{R or } ^{o}\text{K}}{T_o \ ^{o}\text{R or } ^{o}\text{K}} = \frac{\text{Tam } ^{o}\text{R or } ^{o}\text{K}}{519^{o}\text{R or } 288^{o}\text{K}}$$

T_o = International Standard Day Temperature (519°R, 288°K).

NOTE: Either the Metric System (°K) or the British System (°R) will yield the same results when calculating the Theta (θ), and $\sqrt{\theta}$ correction factors. The system employed is left to the operators discretion.

Kc is a fuel flow correction factor that is used for correcting observed fuel flow to standard day conditions.

$$\frac{\text{Observed Wf}}{\delta \times \text{Kc}}$$

8-5. PERFORMANCE DATA COLLECTION

A. Performance data can be collected from control panel instruments or automatically by engine-mounted transducers used in conjunction with some form of recorder. The method selected by an operator must fit his needs.

B. Listed below are several items which must be considered in collecting performance data:

1) Because the performance monitoring process requires detection of small parameter changes, the data must be taken carefully to minimize reading errors.

2) Instrumentation of high accuracy and repeatability is necessary.

3) Performance monitoring data should be taken at steady state* operating conditions.

   *Steady State may be defined as operating with no change in engine inlet or exhaust temperature and pressure, and no power lever movement for at least 4 minutes.

4) Airbleeds and unnecessary power extraction should be completely turned off, if possible, before taking any data.

8-6. SAMPLE CALCULATION

A. Observed Data

1) Ambient Pressure = 29.89 "HgA (14.68 PSIA)

2) Ambient Temperature = 80°F (540°R)

3) % N1 RPM = 92.4%

4) % N2 RPM = 93.0%

5) Fuel Flow (P. P. H.) = 7395

6) EGT = 516°C (960°F)

7) Ps4 = 193.0 PSIG

8) EPR = 1.90

B. Correction Factors & Calculations

1) $\delta \text{ am} = \frac{\text{Pam "HgA}}{\text{Po "HgA}} = \frac{29.89 \text{ "HgA}}{29.92 \text{ "HgA}} = .999$ (See Table 8-1)

2) $\theta \text{ am} = \frac{\text{Tam } ^{o}\text{R}}{\text{To } ^{o}\text{R}} = \frac{^{o}\text{F} + 460}{519 \ ^{o}\text{R}} = \frac{540^{o}\text{R}}{519 \ ^{o}\text{R}} = 1.04$ (See Table 8-2)

RELATIVE PRESSURE

$$\text{DELTA } (\delta) = \frac{P}{PO} = \frac{P}{29.92}$$

P IN. HG. ABS	δ	P IN. HG. ABS	δ	P IN. HG. ABS	δ	P IN. HG. ABS	δ
39.9	1.334	32.9	1.100	25.9	0.8656	18.9	0.6317
39.8	1.330	32.8	1.096	25.8	0.8623	18.8	0.6283
39.7	1.327	32.7	1.093	25.7	0.8586	18.7	0.6250
39.6	1.324	32.6	1.090	25.6	0.8556	18.6	0.6216
39.5	1.320	32.5	1.086	25.5	0.8523	18.5	0.6183
39.4	1.317	32.4	1.083	25.4	0.8489	18.4	0.6150
39.3	1.313	32.3	1.080	25.3	0.8456	18.3	0.6116
39.2	1.310	32.2	1.076	25.2	0.8422	18.2	0.6083
39.1	1.307	32.1	1.073	25.1	0.8389	18.1	0.6050
39.0	1.303	32.0	1.070	25.0	0.8356	18.0	0.6016
38.9	1.300	31.9	1.066	24.9	0.8322	17.9	0.5983
38.8	1.297	31.8	1.063	24.8	0.8289	17.8	0.5949
38.7	1.293	31.7	1.059	24.7	0.8255	17.7	0.5916
38.6	1.290	31.6	1.056	24.6	0.8222	17.6	0.5882
38.5	1.287	31.5	1.053	24.5	0.8188	17.5	0.5849
38.4	1.283	31.4	1.049	24.4	0.8155	17.4	0.5815
38.3	1.280	31.3	1.046	24.3	0.8122	17.3	0.5782
38.2	1.27	31.2	1.043	24.2	0.8088	17.2	0.5749
38.1	1.273	31.1	1.039	24.1	0.8055	17.1	0.5715
38.0	1.270	31.0	1.036	24.0	0.8021	17.0	0.5682
37.9	1.267	30.9	1.033	23.9	0.7988	16.9	0.5648
37.8	1.263	30.8	1.029	23.8	0.7954	16.8	0.5615
37.7	1.260	30.7	1.026	23.7	0.7921	16.7	0.5581
37.6	1.257	30.6	1.023	23.6	0.7888	16.6	0.5548
37.5	1.253	30.5	1.019	23.5	0.7854	16.5	0.5515
37.4	1.250	30.4	1.016	23.4	0.7821	16.4	0.5481
37.3	1.247	30.3	1.013	23.3	0.7787	16.3	0.5448
37.2	1.243	30.2	1.009	23.2	0.7754	16.2	0.5414
37.1	1.240	30.1	1.006	23.1	0.7720	16.1	0.5381
37.0	1.237	30.0	1.003	23.0	0.7687	16.0	0.5348
36.9	1.233	29.9	0.9993	22.9	0.7654	15.9	0.5314
36.8	1.230	29.8	0.9960	22.8	0.7620	15.8	0.5281
36.7	1.227	29.7	0.9926	22.7	0.7587	15.7	0.5247
36.6	1.223	29.6	0.9893	22.6	0.7553	15.6	0.5214
36.5	1.220	29.5	0.9859	22.5	0.7520	15.5	0.5180
36.4	1.217	29.4	0.9826	22.4	0.7487	15.4	0.5147
36.3	1.213	29.3	0.9793	22.3	0.7453	15.3	0.5224
36.2	1.210	29.2	0.9759	22.2	0.7420	15.2	0.5080
36.1	1.207	29.1	0.9726	22.1	0.7386	15.1	0.5047
36.0	1.203	29.0	0.9692	22.0	0.7353	15.0	0.5013
35.9	1.200	28.9	0.9659	21.9	0.7319	14.9	0.4980
35.8	1.196	28.8	0.9626	21.8	0.7286	14.8	0.4946
35.7	1.193	28.7	0.9592	21.7	0.7253	14.7	0.4913
35.6	1.190	28.6	0.9559	21.6	0.7219	14.6	0.4880
35.5	1.186	28.5	0.9525	21.5	0.7186	14.5	0.4846
35.4	1.183	28.4	0.9492	21.4	0.7152	14.4	0.4813
35.3	1.180	28.3	0.9458	21.3	0.7119	14.3	0.4779
35.2	1.176	28.2	0.9425	21.2	0.7085	14.2	0.4746
35.1	1.173	28.1	0.9392	21.1	0.7052	14.1	0.4713
35.0	1.170	28.0	0.9358	21.0	0.7019	14.0	0.4679
34.9	1.166	27.9	0.9325	20.9	0.6985	13.9	0.4646
34.8	1.163	27.8	0.9291	20.8	0.6952	13.8	0.4612
34.7	1.160	27.7	0.9258	20.7	0.6918	13.7	0.4579
34.6	1.156	27.6	0.9224	20.6	0.6885	13.6	0.4545
34.5	1.153	27.5	0.9191	20.5	0.6852	13.5	0.4512
34.4	1.150	27.4	0.9158	20.4	0.6818	13.4	0.4479
34.3	1.146	27.3	0.9124	20.3	0.6785	13.3	0.4445
34.2	1.143	27.2	0.9091	20.2	0.6751	13.2	0.4412
34.1	1.140	27.1	0.9057	20.1	0.6718	13.1	0.4378
34.0	1.136	27.0	0.9024	20.0	0.6684	13.0	0.4345
33.9	1.133	26.9	0.8990	19.9	0.6651	12.9	0.4311
33.8	1.130	26.8	0.8957	19.8	0.6618	12.8	0.4278
33.7	1.126	26.7	0.8924	19.7	0.6584	12.7	0.4245
33.6	1.123	26.6	0.8890	19.6	0.6551	12.6	0.4211
33.5	1.120	26.5	0.8857	19.5	0.6517	12.5	0.4178
33.4	1.116	26.4	0.8823	19.4	0.6484	12.4	0.4144
33.3	1.113	26.3	0.8790	19.3	0.6450	12.3	0.4111
33.2	1.110	26.2	0.8757	19.2	0.6417	12.2	0.4077
33.1	1.106	26.1	0.8723	19.1	0.6384	12.1	0.4044
33.0	1.103	26.0	0.8690	19.0	0.6350	12.0	0.4011

TABLE 8-1

RELATIVE TEMPERATURE

T (°F)	θ	$\sqrt{\theta}$	T (°F)	θ	$\sqrt{\theta}$	T (°F)	θ	$\sqrt{\theta}$	T (°F)	θ	$\sqrt{\theta}$
200	1.272	1.128									
199	1.270	1.127	129	1.135	1.065	59	1.000	1.000	-10	0.867	0.931
198	1.269	1.126	128	1.133	1.064	58	0.999	0.999	-11	0.865	0.930
197	1.267	1.125	127	1.131	1.064	57	0.997	0.998	-12	0.863	0.929
196	1.265	1.124	126	1.129	1.063	56	0.995	0.997	-13	0.861	0.928
195	1.263	1.123	125	1.127	1.062	55	0.993	0.996	-14	0.859	0.927
194	1.261	1.122	124	1.125	1.061	54	0.991	0.995	-15	0.857	0.926
193	1.259	1.122	123	1.123	1.060	53	0.989	0.994	-16	0.856	0.925
192	1.257	1.121	122	1.122	1.059	52	0.988	0.993	-17	0.854	0.924
191	1.255	1.120	121	1.120	1.058	51	0.986	0.992	-18	0.852	0.923
190	1.253	1.119	120	1.118	1.057	50	0.984	0.991	-19	0.850	0.922
189	1.251	1.118	119	1.116	1.056	49	0.982	0.990	-20	0.848	0.921
188	1.249	1.117	118	1.114	1.055	48	0.980	0.989	-21	0.846	0.920
187	1.247	1.117	117	1.112	1.054	47	0.978	0.988	-22	0.844	0.919
186	1.245	1.116	116	1.110	1.054	46	0.976	0.987	-23	0.842	0.918
185	1.243	1.115	115	1.108	1.053	45	0.974	0.986	-24	0.840	0.917
184	1.242	1.114	114	1.106	1.052	44	0.972	0.985	-25	0.838	0.916
183	1.240	1.113	113	1.104	1.051	43	0.970	0.984	-26	0.836	0.914
182	1.238	1.112	112	1.102	1.050	42	0.968	0.984	-27	0.834	0.913
181	1.236	1.111	111	1.100	1.049	41	0.966	0.983	-28	0.832	0.912
180	1.234	1.111	110	1.098	1.048	40	0.964	0.982	-29	0.831	0.911
179	1.232	1.110	109	1.096	1.047	39	0.962	0.981	-30	0.829	0.910
178	1.230	1.109	108	1.095	1.046	38	0.960	0.980	-31	0.827	0.909
177	1.228	1.108	107	1.093	1.045	37	0.959	0.979	-32	0.825	0.908
176	1.226	1.107	106	1.091	1.044	36	0.957	0.978	-33	0.823	0.907
175	1.224	1.106	105	1.089	1.043	35	0.955	0.977	-34	0.821	0.906
174	1.222	1.105	104	1.087	1.042	34	0.953	0.976	-35	0.819	0.905
173	1.220	1.104	103	1.085	1.041	33	0.951	0.975	-36	0.817	0.904
172	1.218	1.104	102	1.083	1.041	32	0.949	0.974	-37	0.815	0.903
171	1.216	1.103	101	1.082	1.040	31	0.047	0.973	-38	0.813	0.902
170	1.214	1.102	100	1.080	1.039	30	0.945	0.972	-39	0.811	0.901
169	1.212	1.101	99	1.078	1.038	29	0.943	0.971	-40	0.809	0.900
168	1.210	1.100	98	1.076	1.037	28	0.941	0.970	-41	0.807	0.899
167	1.208	1.099	97	1.074	1.036	27	0.939	0.969	-42	0.805	0.897
166	1.206	1.098	96	1.072	1.035	26	0.937	0.968	-43	0.804	0.896
165	1.204	1.097	95	1.070	1.034	25	0.935	0.967	-44	0.802	0.895
164	1.202	1.096	94	1.068	1.033	24	0.934	0.966	-45	0.800	0.894
163	1.200	1.095	93	1.066	1.032	23	0.932	0.965	-46	0.798	0.893
162	1.199	1.095	92	1.064	1.031	22	0.930	0.964	-47	0.796	0.892
161	1.197	1.094	91	1.062	1.030	21	0.928	0.963	-48	0.794	0.891
160	1.195	1.093	90	1.060	1.029	20	0.926	0.962	-49	0.792	0.890
159	1.193	1.092	89	1.058	1.029	19	0.924	0.961	-50	0.790	0.889
158	1.191	1.091	88	1.056	1.028	18	0.922	0.960	-51	0.788	0.888
157	1.189	1.090	87	1.055	1.027	17	0.920	0.959	-52	0.786	0.887
156	1.187	1.089	86	1.053	1.026	16	0.918	0.958	-53	0.784	0.886
155	1.185	1.089	85	1.051	1.025	15	0.916	0.957	-54	0.782	0.885
154	1.183	1.088	84	1.049	1.024	14	0.914	0.956	-55	0.780	0.883
153	1.181	1.087	83	1.047	1.023	13	0.912	0.955	-56	0.778	0.882
152	1.179	1.086	82	1.045	1.022	12	0.910	0.954	-57	0.777	0.881
151	1.177	1.085	81	1.043	1.021	11	0.908	0.953	-58	0.775	0.880
150	1.176	1.084	80	1.041	1.020	10	0.907	0.952	-59	0.773	0.879
149	1.174	1.083	79	1.039	1.019	9	0.905	0.951	-60	0.771	0.878
148	1.172	1.082	78	1.037	1.018	8	0.903	0.950	-61	0.769	0.877
147	1.170	1.082	77	1.035	1.017	7	0.901	0.949	-62	0.767	0.876
146	1.168	1.081	76	1.033	1.016	6	0.899	0.948	-63	0.765	0.875
145	1.166	1.080	75	1.031	1.015	5	0.897	0.947	-64	0.763	0.874
144	1.164	1.079	74	1.029	1.014	4	0.895	0.946	-65	0.761	0.872
143	1.162	1.078	73	1.028	1.013	3	0.893	0.945	-66	0.759	0.871
142	1.160	1.077	72	1.026	1.012	2	0.891	0.944	-67	0.757	0.870
141	1.158	1.076	71	1.024	1.012	1	0.889	0.943	-68	0.755	0.869
140	1.156	1.075	70	1.022	1.011	0	0.887	0.942	-69	0.753	0.868
139	1.154	1.074	69	1.020	1.010	-1	0.884	0.940	-70	0.751	0.867
138	1.152	1.073	68	1.018	1.009	-2	0.883	0.939	-71	0.750	0.866
137	1.150	1.073	67	1.016	1.008	-3	0.881	0.938	-72	0.748	0.865
136	1.149	1.072	66	1.014	1.007	-4	0.879	0.937	-73	0.746	0.864
135	1.147	1.071	65	1.012	1.006	-5	0.877	0.936	-74	0.744	0.862
134	1.145	1.070	64	1.010	1.005	-6	0.875	0.935	-75	0.742	0.861
133	1.143	1.069	63	1.008	1.004	-7	0.873	0.934	-76	0.740	0.860
132	1.141	1.068	62	1.006	1.003	-8	0.871	0.933	-77	0.738	0.859
131	1.139	1.067	61	1.004	1.002	-9	0.869	0.932	-78	0.736	0.858
130	1.137	1.066	60	1.002	1.001				-79	0.734	0.857

TABLE 8-2

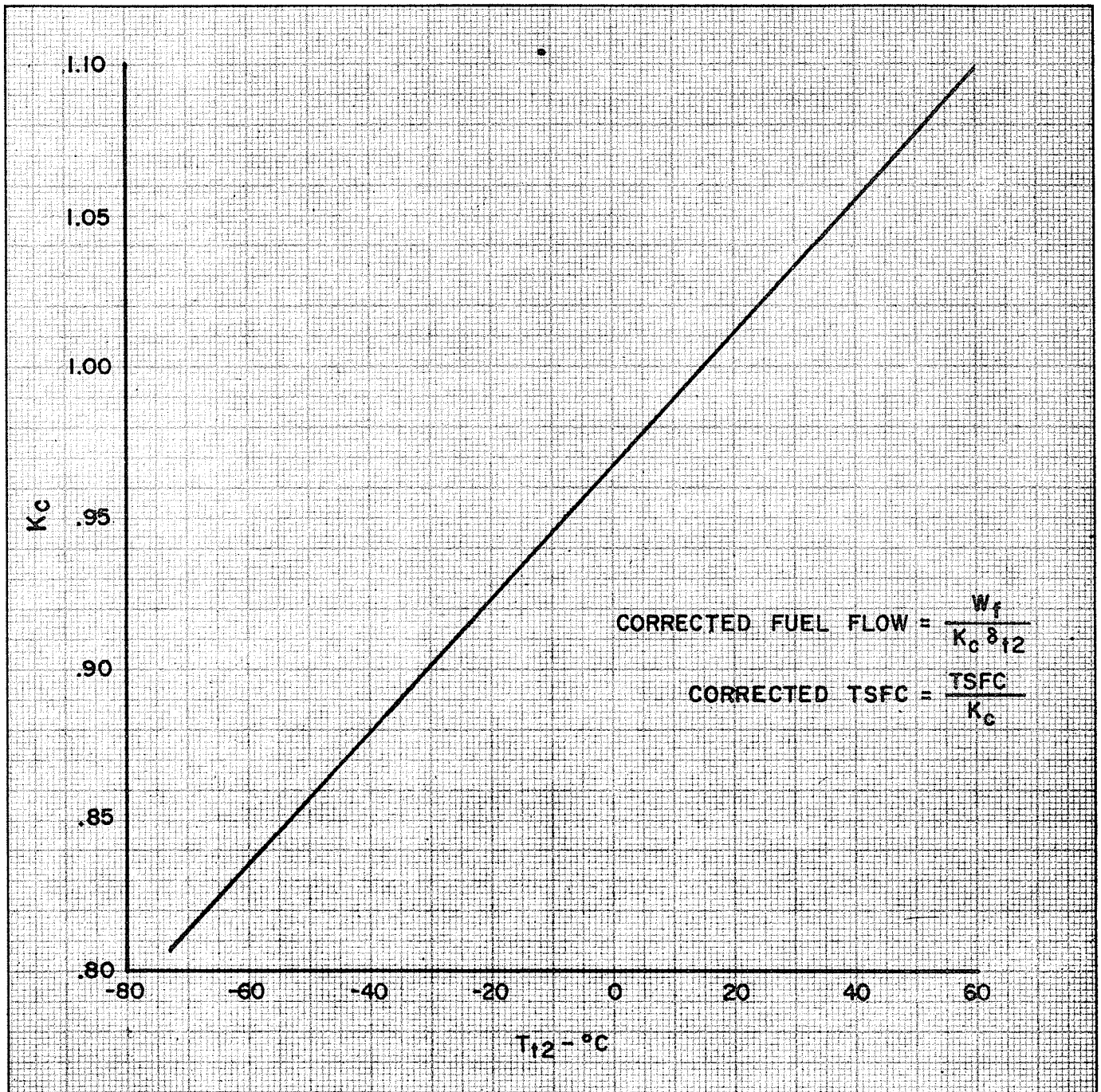

TEMPERATURE CORRECTION FOR FUEL FLOW

Figure 8-2

3) $\sqrt{\theta \text{ am}} = \sqrt{\frac{\text{Tam } ^{o}\text{R}}{\text{To } ^{o}\text{R}}} = \sqrt{\frac{^{o}\text{F} + 460}{519 \ ^{o}\text{R}}} = \sqrt{\frac{540 \ ^{o}\text{R}}{519 \ ^{o}\text{R}}} = 1.02$ (See Table 8-2)

4) Kc Correction Factor = 1.0256 (See Figure 8-2).

5) Indicated RPM = % Indicated RPM X 100% RPM.

NOTE: Flight Deck engine instrumentation indicates compressor speed in percent of actual RPM. Since the compressor speed curves in Figure 8-3B are plotted against RPM values, any observed compressor speed in percent must be converted to RPM prior to correcting.

To convert percent RPM to RPM, the 100% compressor RPM must be known. For all JT8D models 100% N1 is 8,589 RPM, and 100% N2 is 12,250 RPM. A sample conversion appears in paragraph 8-6C.

6) PSIA = PSI Gage + Pam

NOTE: If compressor discharge static pressure (Ps4) is measured in gage pressure, it must be converted to absolute pressure before the compressor pressure ratio (Ps4/Pt2) can be calculated.

Absolute pressure is determined by adding the barometric pressure (Pam) to the gage pressure as in the following equation.

Ps4 Absolute = Ps4 Gage + Pam

NOTE: Since Pt2 will generally be known in "HgA, it is necessary to convert Pt2 "HgA to Pt2 (PSIA). This is required to maintain consistency of units when calculating Ps4/Pt2.

Table 8-3 is provided for making direct conversions.

7) Exhaust Gas Temperature (EGT) as observed on the flight deck instrumentation is given in degrees centigrade. The corrected EGT curve in Figure 8-3B is plotted against corrected EGT in degrees fahrenheit, thus it is necessary to convert the observed EGT in degrees centigrade to degrees fahrenheit prior to correcting.

Tables 8-4 and 8-4A are provided for convenient temperature conversion.

CONVERSION CHART
"Hg vs P.S.I.

"HG	PSI	"HG	PSI	"HG	PSI	"HG	PSI	"HG	PSI	"HG	PSI
28.00	13.75	28.50	14.00	29.00	14.25	29.50	14.49	30.00	14.74	30.50	14.98
28.01	13.76	28.51	14.01	29.01	14.25	29.51	14.50	30.01	14.74	30.51	14.99
28.02	13.76	28.52	14.01	29.02	14.26	29.52	14.50	30.02	14.75	30.52	14.99
28.03	13.77	28.53	14.01	29.03	14.26	29.53	14.51	30.03	14.75	30.53	15.00
28.04	13.77	28.54	14.02	29.04	14.27	29.54	14.51	30.04	14.76	30.54	15.00
28.05	13.78	28.55	14.02	29.05	14.27	29.55	14.51	30.05	14.76	30.55	15.01
28.06	13.78	28.56	14.03	29.06	14.28	29.56	14.52	30.06	14.77	30.56	15.01
28.07	13.79	28.57	14.03	29.07	14.28	29.57	14.52	30.07	14.77	30.57	15.02
28.08	13.79	28.58	14.04	29.08	14.29	29.58	14.53	30.08	14.78	30.58	15.02
28.09	13.80	28.59	14.04	29.09	14.29	29.59	14.53	30.09	14.78	30.59	15.03
28.10	13.80	28.60	14.05	29.10	14.29	29.60	14.54	30.10	14.79	30.60	15.03
28.11	13.81	28.61	14.05	29.11	14.30	29.61	14.54	30.11	14.79	30.61	15.04
28.12	13.81	28.62	14.06	29.12	14.30	29.62	14.55	30.12	14.79	30.62	15.04
28.13	13.82	28.63	14.06	29.13	14.31	29.63	14.55	30.13	14.80	30.63	15.05
28.14	13.82	28.64	14.07	29.14	14.31	29.64	14.56	30.14	14.80	30.64	15.05
28.15	13.83	28.65	14.07	29.15	14.32	29.65	14.56	30.15	14.81	30.65	15.06
28.16	13.83	28.66	14.08	29.16	14.32	29.66	14.57	30.16	14.81	30.66	15.06
28.17	13.84	28.67	14.08	29.17	14.33	29.67	14.57	30.17	14.82	30.67	15.07
28.18	13.84	28.68	14.09	29.18	14.33	29.68	14.58	30.18	14.82	30.68	15.07
28.19	13.85	28.69	14.09	29.19	14.34	29.69	14.58	30.19	14.83	30.69	15.07
28.20	13.85	28.70	14.10	29.20	14.34	29.70	14.59	30.20	14.83	30.70	15.08
28.21	13.86	28.71	14.10	29.21	14.35	29.71	14.59	30.21	14.84	30.71	15.08
28.22	13.86	28.72	14.11	29.22	14.35	29.72	14.60	30.22	14.84	30.72	15.09
28.23	13.87	28.73	14.11	29.23	14.36	29.73	14.60	30.23	14.85	30.73	15.09
28.24	13.87	28.74	14.12	29.24	14.36	29.74	14.61	30.24	14.85	30.74	15.10
28.25	13.88	28.75	14.12	29.25	14.37	29.75	14.61	30.25	14.86	30.75	15.10
28.26	13.88	28.76	14.13	29.26	14.37	29.76	14.62	30.26	14.86	30.76	15.11
28.27	13.89	28.77	14.13	29.27	14.38	29.77	14.62	30.27	14.87	30.77	15.11
28.28	13.89	28.78	14.14	29.28	14.38	29.78	14.63	30.28	14.87	30.78	15.12
28.29	13.90	28.79	14.14	29.29	14.39	29.79	14.63	30.29	14.88	30.79	15.12
28.30	13.90	28.80	14.15	29.30	14.39	29.80	14.64	30.30	14.88	30.80	15.13
28.31	13.91	28.81	14.15	29.31	14.40	29.81	14.64	30.31	14.89	30.81	15.13
28.32	13.91	28.82	14.16	29.32	14.40	29.82	14.65	30.32	14.89	30.82	15.14
28.33	13.92	28.83	14.16	29.33	14.41	29.83	14.65	30.33	14.90	30.83	15.14
28.34	13.92	28.84	14.17	29.34	14.41	29.84	14.66	30.34	14.90	30.84	15.15
28.35	13.93	28.85	14.17	29.35	14.42	29.85	14.66	30.35	14.91	30.85	15.15
28.36	13.93	28.86	14.18	29.36	14.42	29.86	14.67	30.36	14.91	30.86	15.16
28.37	13.94	28.87	14.18	29.37	14.43	29.87	14.67	30.37	14.92	30.87	15.16
28.38	13.94	28.88	14.19	29.38	14.43	29.88	14.68	30.38	14.92	30.88	15.17
28.39	13.95	28.89	14.19	29.39	14.44	29.89	14.68	30.39	14.93	30.89	15.17
28.40	13.95	28.90	14.20	29.40	14.44	29.90	14.69	30.40	14.93	30.90	15.18
28.41	13.96	28.91	14.20	29.41	14.45	29.91	14.69	30.41	14.94	30.91	15.18
28.42	13.96	28.92	14.21	29.42	14.45	29.92	14.70	30.42	14.94	30.92	15.19
28.43	13.97	28.93	14.21	29.43	14.46	29.93	14.70	30.43	14.95	30.93	15.19
28.44	13.97	28.94	14.22	29.44	14.46	29.94	14.71	30.44	14.95	30.94	15.20
28.45	13.98	28.95	14.22	29.45	14.47	29.95	14.71	30.45	14.96	30.95	15.20
28.46	13.98	28.96	14.23	29.46	14.47	29.96	14.72	30.46	14.96	30.96	15.21
28.47	13.99	28.97	14.23	29.47	14.48	29.97	14.72	30.47	14.97	30.97	15.21
28.48	13.99	28.98	14.24	29.48	14.48	29.98	14.73	30.48	14.97	30.98	15.22
28.49	14.00	28.99	14.24	29.49	14.49	29.99	14.73	30.49	14.98	30.99	15.22

TABLE 8-3

TEMPERATURE CONVERSION TABLE

CONVERSION CONSTANTS

THE FOLLOWING TABLE GIVES THE CONVERSION OF FAHRENHEIT OR CELSIUS (CENTIGRADE) TEMPERATURES FROM −100° TO +249° IN UNITS OF 1° AND FROM +250 TO +2645° IN UNITS OF 5°. THE READINGS ARE BASED ON THE STANDARD TEMPERATURE SCALE. CONVERSION OF ANY VALUE TO THE ABSOLUTE TEMPERATURE SCALE MAY BE MADE AS FOLLOWS:

DEGREES KELVIN (°K) = DEGREES CELSIUS + 273.16
DEGREES RANKINE (°R) = DEGREES FAHRENHEIT + 459.69

IF °F AND °C DENOTE READINGS ON THE FAHRENHEIT OR CELSIUS STANDARD SCALES, THEN

$°C = 5/9\ (°F - 32)$ $\qquad$ $°F = 9/5\ °C + 32$

USE OF THE TABLE

LOCATE TEMPERATURE TO BE CONVERTED IN THE MIDDLE COLUMN; IF IN DEGREES CELSIUS, READ THE FAHRENHEIT EQUIVALENT IN THE RIGHT-HAND COLUMN; IF IN DEGREES FAHRENHEIT, READ THE CELSIUS EQUIVALENT IN THE LEFT-HAND COLUMN.

C		F	C		F	C		F	C		F	C		F	C		F
-73.3	-100	-148.0	-45.6	-50	-58.0	-17.8	0	32.0	10.0	50	122.0	37.8	100	212.0	65.6	150	302.0
-72.8	-99	-146.2	-45.0	-49	-56.2	-17.2	1	33.8	10.6	51	123.8	38.3	101	213.8	66.1	151	303.8
-72.2	-98	-144.4	-44.4	-48	-54.4	-16.7	2	35.6	11.1	52	125.6	38.9	102	215.6	66.7	152	305.6
-71.7	-97	-142.6	-43.9	-47	-52.6	-16.1	3	37.4	11.7	53	127.4	39.4	103	217.4	67.2	153	307.4
-71.1	-96	-140.8	-43.3	-46	-50.8	-15.6	4	39.2	12.2	54	129.2	40.0	104	219.2	67.8	154	309.2
-70.6	-95	-139.0	-42.8	-45	-49.0	-15.0	5	41.0	12.8	55	131.0	40.6	105	221.0	68.3	155	311.0
-70.0	-94	-137.2	-42.2	-44	-47.2	-14.4	6	42.8	13.3	56	132.8	41.1	106	222.8	68.9	156	312.8
-69.4	-93	-135.4	-41.7	-43	-45.4	-13.9	7	44.6	13.9	57	134.6	41.7	107	224.6	69.4	157	314.6
-68.9	-92	-133.6	-41.1	-42	-43.6	-13.3	8	46.4	14.4	58	136.4	42.2	108	226.4	70.0	158	316.4
-68.3	-91	-131.8	-40.6	-41	-41.8	-12.8	9	48.2	15.0	59	138.2	42.8	109	228.2	70.6	159	318.2
-67.8	-90	-130.0	-40.0	-40	-40.0	-12.2	10	50.0	15.6	60	140.0	43.3	110	230.0	71.1	160	320.0
-67.2	-89	-128.2	-39.4	-39	-38.2	-11.7	11	51.8	16.1	61	141.8	43.9	111	231.8	71.7	161	321.8
-66.7	-88	-126.4	-38.9	-38	-36.4	-11.1	12	53.6	16.7	62	143.6	44.4	112	233.6	72.2	162	323.6
-66.1	-87	-124.6	-38.3	-37	-34.6	-10.6	13	55.4	17.2	63	145.4	45.0	113	235.4	72.8	163	325.4
-65.6	-86	-122.8	-37.8	-36	-32.8	-10.0	14	57.2	17.8	64	147.2	45.6	114	237.2	73.3	164	327.2
-65.0	-85	-121.0	-37.2	-35	-31.0	- 9.4	15	59.0	18.3	65	149.0	46.1	115	239.0	73.9	165	329.0
-64.4	-84	-119.2	-36.7	-34	-29.0	- 8.9	16	60.8	18.9	66	150.8	46.7	116	240.8	74.4	166	330.8
-63.9	-83	-117.4	-36.1	-33	-27.4	- 8.3	17	62.6	19.4	67	152.6	47.2	117	242.6	75.0	167	332.6
-63.3	-82	-115.6	-35.6	-32	-25.6	- 7.8	18	64.4	20.0	68	154.4	47.8	118	244.4	75.6	168	334.4
-62.8	-81	-113.8	-35.0	-31	-23.8	- 7.2	19	66.2	20.6	69	156.2	48.3	119	246.2	76.1	169	336.2
-62.2	-80	-112.0	-34.4	-30	-22.0	- 6.7	20	68.0	21.1	70	158.0	48.9	120	248.0	76.1	170	338.0
-61.7	-79	-110.2	-33.9	-29	-20.2	- 6.1	21	69.8	21.7	71	159.8	49.4	121	249.8	77.2	171	339.8
-61.1	-78	-108.4	-33.3	-28	-18.4	- 5.6	22	71.6	22.2	72	161.6	50.0	122	251.6	77.8	172	341.6
-60.6	-77	-106.6	-32.8	-27	-16.6	- 5.0	23	73.4	22.8	73	163.4	50.6	123	253.4	78.3	173	343.4
-60.0	-76	-104.8	-32.2	-26	-14.8	- 4.4	24	75.2	23.3	74	165.2	51.1	124	255.2	78.9	174	345.2
-59.4	-75	-103.0	-31.7	-25	-13.0	- 3.9	25	77.0	23.9	75	167.0	51.7	125	257.0	79.4	175	347.0
-58.9	-74	-101.2	-31.1	-24	-11.2	- 3.3	26	78.8	24.4	76	168.8	52.2	126	258.8	80.0	176	348.8
-58.3	-73	- 99.4	-30.6	-23	- 9.4	- 2.8	27	80.6	25.0	77	170.6	52.8	127	260.6	80.6	177	350.6
-57.8	-72	- 97.6	-30.0	-22	- 7.6	- 2.2	28	82.4	25.6	78	172.4	53.3	128	262.4	81.1	178	352.4
-57.2	-71	- 95.8	-29.4	-21	- 5.8	- 1.7	29	84.2	26.1	79	174.2	53.9	129	264.2	81.7	179	354.2
-56.7	-70	- 94.0	-28.9	-20	- 4.0	- 1.1	30	86.0	26.7	80	176.0	54.4	130	266.0	82.2	180	356.0
-56.1	-69	- 92.2	-28.3	-19	- 2.2	- 0.6	31	87.8	27.2	81	177.8	55.0	131	267.8	82.8	181	357.8
-55.6	-68	- 90.4	-27.8	-18	- 0.4	0.0	32	89.6	27.8	82	179.6	55.6	132	269.6	83.3	182	359.6
-55.0	-67	- 88.6	-27.2	-17	1.4	0.6	33	91.4	28.3	83	181.4	56.1	133	271.4	83.9	183	361.4
-54.4	-66	- 86.8	-26.7	-16	3.2	1.1	34	93.2	28.9	84	183.2	56.7	134	273.2	84.4	184	363.2
-53.9	-65	- 85.0	-26.1	-15	5.0	1.7	35	95.0	29.4	85	185.0	57.2	135	275.0	85.0	185	365.0
-53.3	-64	- 83.2	-25.6	-14	6.8	2.2	36	96.8	30.0	86	186.8	57.8	136	276.8	85.6	186	366.8
-52.8	-63	- 81.4	-25.0	-13	8.6	2.8	37	98.6	30.6	87	188.6	58.3	137	278.6	86.1	187	368.6
-52.2	-62	- 79.6	-24.4	-12	10.4	3.3	38	100.4	31.1	88	190.4	58.9	138	280.4	86.7	188	370.4
-51.7	-61	- 77.8	-23.9	-11	12.2	3.9	39	102.2	31.7	89	192.2	59.4	139	282.2	87.2	189	372.2
-51.1	-60	- 76.0	-23.3	-10	14.0	4.4	40	104.0	32.2	90	194.0	60.0	140	284.0	87.8	190	374.0
-50.6	-59	- 74.2	-22.8	- 9	15.8	5.0	41	105.8	32.8	91	195.8	60.6	141	285.8	88.3	191	375.8
-50.0	-58	- 72.4	-22.2	- 8	17.6	5.6	42	107.6	33.3	92	197.6	61.1	142	287.6	88.9	192	377.6
-49.4	-57	- 70.6	-21.7	- 7	19.4	6.1	43	109.4	33.9	93	199.4	61.7	143	289.4	89.4	193	379.4
-48.9	-56	- 68.8	-21.1	- 6	21.2	6.7	44	111.2	34.4	94	201.2	62.2	144	291.2	90.0	194	381.2
-48.3	-55	- 67.0	-20.6	- 5	23.0	7.2	45	113.0	35.0	95	203.0	72.8	145	293.0	90.6	195	383.0
-47.8	-54	- 65.2	-20.0	- 4	24.8	7.8	46	114.8	35.6	96	204.8	63.3	146	294.8	91.1	196	384.8
-47.2	-53	- 63.4	-19.4	- 3	26.6	8.3	47	116.6	36.1	97	206.6	63.9	147	296.6	91.7	197	386.6
-46.7	-52	- 61.6	-18.9	- 2	28.4	8.9	48	118.4	36.7	98	208.4	64.4	148	298.4	92.2	198	388.4
-46.1	-51	- 59.8	-18.3	- 1	30.2	9.4	49	120.2	37.2	99	210.2	65.0	149	300.2	92.8	199	390.2

C		F	C		F	C		F	C		F	C		F	C		F
93.3	200	392.0	176.7	350	662.0	371.1	700	1292.0	565.6	1050	1922.0	760.0	1400	2552.0	954.4	1750	3182.0
93.9	201	393.8	179.4	355	671.0	373.9	705	1301.0	568.3	1055	1931.0	762.8	1405	2561.0	957.2	1755	3191.0
94.4	202	395.6	182.2	360	680.0	376.7	710	1310.0	571.1	1060	1940.0	765.6	1410	2570.0	960.0	1760	3200.0
95.0	203	397.4	185.0	365	689.0	379.4	715	1319.0	573.9	1065	1949.0	768.3	1415	2579.0	962.8	1765	3209.0
95.6	204	399.2	187.8	370	698.0	382.2	720	1328.0	576.7	1070	1958.0	771.1	1420	2588.0	965.6	1770	3218.0
96.1	205	401.0	190.6	375	707.0	385.0	725	1337.0	579.4	1075	1967.0	773.9	1425	2597.0	968.3	1775	3227.0
96.7	206	402.8	193.3	380	716.0	387.8	730	1346.0	582.2	1080	1976.0	776.7	1430	2606.0	971.1	1780	3236.0
97.2	207	404.6	196.1	385	725.0	390.6	735	1355.0	585.0	1085	1985.0	779.4	1435	2615.0	973.9	1785	3245.0
97.8	208	406.4	198.9	390	734.0	393.3	740	1364.0	587.8	1090	1994.0	782.2	1440	2624.0	976.7	1790	3254.0
98.3	209	408.2	201.7	395	743.0	396.1	745	1373.0	590.6	1095	2003.0	785.0	1445	2633.0	979.4	1795	3263.0
98.9	210	410.0	204.4	400	752.0	398.9	750	1382.0	593.3	1100	2012.0	787.8	1450	2642.0	982.2	1800	3272.0
99.4	211	411.8	207.2	405	761.0	401.7	755	1391.0	596.1	1105	2021.0	790.6	1455	2651.0	985.0	1805	3281.0
100.0	212	413.6	210.0	410	770.0	404.4	760	1400.0	598.9	1110	2030.0	793.3	1460	2660.0	987.8	1810	3290.0
100.6	213	415.4	212.8	415	779.0	407.2	765	1409.0	601.7	1115	2039.0	796.1	1465	2669.0	990.6	1815	3299.0
101.1	214	417.2	215.6	420	788.0	410.0	770	1418.0	604.4	1120	2048.0	798.9	1470	2678.0	993.3	1820	3308.0
101.7	215	419.0	218.3	425	797.0	412.8	775	1427.0	607.2	1125	2057.0	801.7	1475	2687.0	996.1	1825	3317.0
102.2	216	420.8	221.1	430	806.0	415.6	780	1436.0	610.0	1130	2066.0	804.4	1480	2696.0	998.9	1830	3326.0
102.8	217	422.6	223.9	435	815.0	418.3	785	1445.0	612.8	1135	2075.0	807.2	1485	2705.0	1001.7	1835	3335.0
103.3	218	424.4	226.7	440	824.0	421.1	790	1454.0	615.6	1140	2084.0	810.0	1490	2714.0	1004.4	1840	3344.0
103.9	219	426.2	229.4	445	833.0	423.9	795	1463.0	618.3	1145	2093.0	812.8	1495	2723.0	1007.2	1845	3353.0
104.4	220	428.0	232.2	450	842.0	426.7	800	1472.0	621.1	1150	2102.0	815.6	1500	2732.0	1010.0	1850	3362.0
105.0	221	429.8	235.0	455	851.0	429.4	805	1481.0	623.9	1155	2111.0	818.3	1505	2741.0	1012.8	1855	3371.0
105.6	222	431.6	237.8	460	860.0	432.2	810	1490.0	626.7	1160	2120.0	821.1	1510	2750.0	1015.6	1860	3380.0
106.1	223	433.4	240.6	465	869.0	435.0	815	1499.0	629.4	1165	2129.0	823.9	1515	2759.0	1018.3	1865	3389.0
106.7	224	435.2	243.3	470	878.0	437.8	820	1508.0	632.2	1170	2138.0	826.7	1520	2768.0	1021.1	1870	3398.0
107.2	225	437.0	246.1	475	887.0	440.6	825	1517.0	635.0	1175	2147.0	829.4	1525	2777.0	1023.9	1875	3407.0
107.8	226	438.8	248.9	480	896.0	443.3	830	1526.0	637.8	1180	2156.0	832.2	1530	2786.0	1026.9	1880	3416.0
108.3	227	440.6	251.7	485	905.0	446.1	835	1535.0	640.6	1185	2165.0	835.0	1535	2795.0	1029.4	1885	3425.0
108.9	228	442.4	254.4	490	914.0	448.9	840	1544.0	643.3	1190	2174.0	837.8	1540	2804.0	1032.2	1890	3434.0
109.4	229	444.2	257.2	495	923.0	451.7	845	1553.0	646.1	1195	2183.0	840.6	1545	2813.0	1035.0	1895	3443.0
110.0	230	446.0	260.0	500	932.0	454.4	850	1562.0	648.9	1200	2192.0	843.3	1550	2822.0	1037.8	1900	3452.0
110.6	231	447.8	262.8	505	941.0	457.2	855	1571.0	651.7	1205	2201.0	846.1	1555	2831.0	1040.6	1905	3461.0
111.1	232	449.6	265.6	510	950.0	460.0	860	1580.0	654.4	1210	2210.0	848.9	1560	2840.0	1043.3	1910	3470.0
111.7	233	451.4	268.3	515	959.0	462.8	865	1589.0	657.2	1215	2219.0	851.7	1565	2849.0	1046.1	1915	3479.0
112.2	234	453.2	271.1	520	968.0	465.6	870	1598.0	660.0	1220	2228.0	854.4	1570	2858.0	1048.9	1920	3488.0
112.8	235	455.0	273.9	525	977.0	468.3	875	1607.0	662.8	1225	2237.0	857.2	1575	2867.0	1051.7	1925	3497.0
113.3	236	456.8	276.7	530	986.0	471.1	880	1616.0	665.6	1230	2246.0	860.0	1580	2876.0	1054.4	1930	3506.0
113.9	237	458.6	279.4	535	995.0	473.9	885	1625.0	668.3	1235	2255.0	862.8	1585	2885.0	1057.2	1935	3515.0
114.4	238	460.4	282.2	540	1004.0	476.7	890	1634.0	671.1	1240	2264.0	865.6	1590	2894.0	1060.0	1940	3524.0
115.0	239	462.2	285.0	545	1013.0	479.4	895	1643.0	673.9	1245	2273,0	868.3	1595	2903.0	1062.8	1945	3533.0
115.6	240	464.0	287.8	550	1022.0	482.2	900	1652.0	676.7	1250	2282.0	871.1	1600	2912.0	1065.6	1950	3542.0
116.1	241	465.8	290.6	555	1031.0	485.0	905	1661.0	679.4	1255	2291.0	873.9	1605	2921.0	1068.3	1955	3551.0
116.7	242	467.6	293.3	560	1040.0	487.8	910	1670.0	682.2	1260	2300.0	876.7	1610	2930.0	1071.1	1960	3560.0
117.2	243	469.4	296.1	565	1049.0	490.6	915	1679.0	685.0	1265	2309.0	879.4	1615	2939.0	1073.9	1965	3569.0
117.8	244	471.2	298.9	570	1058.0	493.3	920	1688.0	687.8	1270	2318.0	882.2	1620	2948.0	1076.7	1970	3578.0
118.3	245	473.0	301.7	575	1067.0	496.1	925	1697.0	690.6	1275	2327.0	885.0	1625	2957.0	1079.4	1975	3587.0
118.9	246	474.8	304.4	580	1076.0	498.9	930	1706.0	693.3	1280	2336.0	887.8	1630	2966.0	1082.2	1980	3596.0
119.4	247	476.6	307.2	585	1085.0	501.7	935	1715.0	696.1	1285	2345.0	890.6	1635	2975.0	1085.0	1985	3605.0
120.0	248	478.4	310.0	590	1094.0	504.4	940	1724.0	698.9	1290	2354.0	893.3	1640	2984.0	1087.8	1990	3614.0
120.6	249	480.2	312.8	595	1103.0	507.2	945	1733.0	701.7	1295	2363.0	896.1	1645	2993.0	1090.6	1995	3623.0
121.1	250	482.0	315.6	600	1112.0	510.0	950	1742.0	704.4	1300	2372.0	898.9	1650	3002.0	1093.6	2000	3632.0
123.9	255	491.0	318.3	605	1121.0	512.8	955	1751.0	707.2	1305	2381.0	901.7	1655	3011.0	1096.1	2005	3641.0
126.7	260	500.0	321.1	610	1130.0	515.6	960	1760.0	710.0	1310	2390.0	904.4	1660	3020.0	1098.9	2010	3650.0
129.4	265	509.0	323.9	615	1139.0	518.3	965	1769.0	712.8	1315	2399.0	907.2	1665	3029.0	1101.7	2015	3659.0
132.2	270	518.0	326.7	620	1148.0	521.1	970	1778.0	715.6	1320	2408.0	910.0	1670	3038.0	1104.4	2020	3668.0
135.0	275	527.0	329.4	625	1157.0	523.9	975	1787.0	718.3	1325	2417.0	912.8	1675	3047.0	1107.2	2025	3677.0
137.8	280	536.0	332.2	630	1166.0	526.7	980	1796.0	721.1	1330	2426.0	915.6	1680	3056.0	1110.0	2030	3686.0
140.6	285	545.0	335.0	635	1175.0	529.4	985	1805.0	723.9	1335	2435.0	918.3	1685	3065.0	1112.8	2035	3695.0
143.3	290	554.0	337.8	640	1184.0	532.2	990	1814.0	726.7	1340	2444.0	921.1	1690	3074.0	1115.6	2040	3704.0
146.1	295	563.0	340.6	645	1193.0	535.0	995	1823.0	729.4	1345	2453.0	923.9	1695	3083.0	1118.3	2045	3713.0
148.9	300	572.0	343.3	650	1202.0	537.8	1000	1832.0	732.2	1350	2462.0	926.7	1700	3092.0	1121.1	2050	3722.0
151.7	305	581.0	346.1	655	1211.0	540.6	1005	1841.0	735.0	1355	2471.0	929.4	1705	3101.0	1123.9	2055	3731.0
154.4	310	590.0	348.9	660	1220.0	543.3	1010	1850.0	737.8	1360	2480.0	932.2	1710	3110.0	1126.7	2060	3740.0
157.2	315	599.0	351.7	665	1229.0	546.1	1015	1859.0	740.6	1365	2489.0	935.0	1715	3119.0	1129.4	2065	3749.0
160.0	320	608.0	354.4	670	1238.0	548.9	1020	1868.0	743.3	1370	2498.0	937.8	1720	3128.0	1132.2	2070	3758.0
162.8	325	617.0	357.2	675	1247.0	551.7	1025	1877.0	746.1	1375	2507.0	940.6	1725	3137.0	1135.0	2075	3767.0
165.6	330	626.0	360.0	680	1256.0	554.4	1030	1886.0	748.9	1380	2516.0	943.3	1730	3146.0	1137.8	2080	3776.0
168.3	335	635.0	362.8	685	1265.0	557.2	1035	1895.0	751.7	1385	2525.0	946.1	1735	3155.0	1140.6	2085	3785.0
171.1	340	644.0	365.6	690	1274.0	560.0	1040	1904.0	754.4	1390	2534.0	948.9	1740	3164.0	1143.3	2090	3794.0
173.9	345	653.0	368.3	695	1283.0	562.8	1045	1913.0	757.2	1395	2543.0	951.7	1745	3173.0	1146.1	2095	3803.0

TABLE 8-4A

C. Correcting Observed Data

1) Indicated N1 RPM = % Indicated N1 X 100% N1 RPM = 92.4% X 8,589 RPM = 7,936 RPM

2) Indicated N2 RPM = % Indicated N2 X 100% N2 RPM = 93.0% X 12,250 RPM = 11,393 RPM

3) Indicated EGT = 516°C
From Table 8-4B, 516°C = 960°F

4) $$\text{Corrected N1 RPM} = \frac{\text{Observed N1 RPM}}{\sqrt{\theta\ \text{am}}} = \frac{7,936\ \text{RPM}}{1.02} = 7,780\ \text{RPM}$$

5) $$\text{Corrected N2 RPM} = \frac{\text{Observed N2 RPM}}{\sqrt{\theta\ \text{am}}} = \frac{11,393\ \text{RPM}}{1.02} = 11,170\ \text{RPM}$$

6) $$\text{Corrected EGT}\ ^{\circ}\text{F} = \frac{\text{Observed EGT}\ ^{\circ}\text{F} + 460}{\theta\ \text{am}} = \frac{960^{\circ}\text{F} + 460}{1.04} = 1,365^{\circ}\text{R}$$

$$^{\circ}\text{F} = {}^{\circ}\text{R} - 460$$
$$^{\circ}\text{F} = 1,365 - 460$$
$$^{\circ}\text{F} = 905$$

7) Corrected Fuel Flow (P.P.H.) =

$$\frac{\text{Observed Fuel Flow}}{\delta\ \text{am} \times \text{Kc}} = \frac{7395}{.999 \times 1.0256} = 7,250$$

8) $$\text{Ps4/Pt2} = \frac{\text{Ps4 (Psig)} + \text{Pam (Psia)}}{\text{Pt2 (Psia)}} = \frac{193.0 + 14.68}{14.68} = 14.15$$

8-7. PLOTTING

A. The corrected parameters and calculated pressure ratio can now be plotted and compared against the average JT8D-7 Performance Baseline curves given in Figures 8-3A and 8-3B.

B. To plot and compare this data, enter the Performance Curves in Figures 8-3A and 8-3B at the observed EPR 1.90. Proceed up the observed EPR line and plot the corrected N1, N2, Fuel Flow, EGT, and calculated Ps4/Pt2. If the plotted data falls within the average JT8D-7 performance

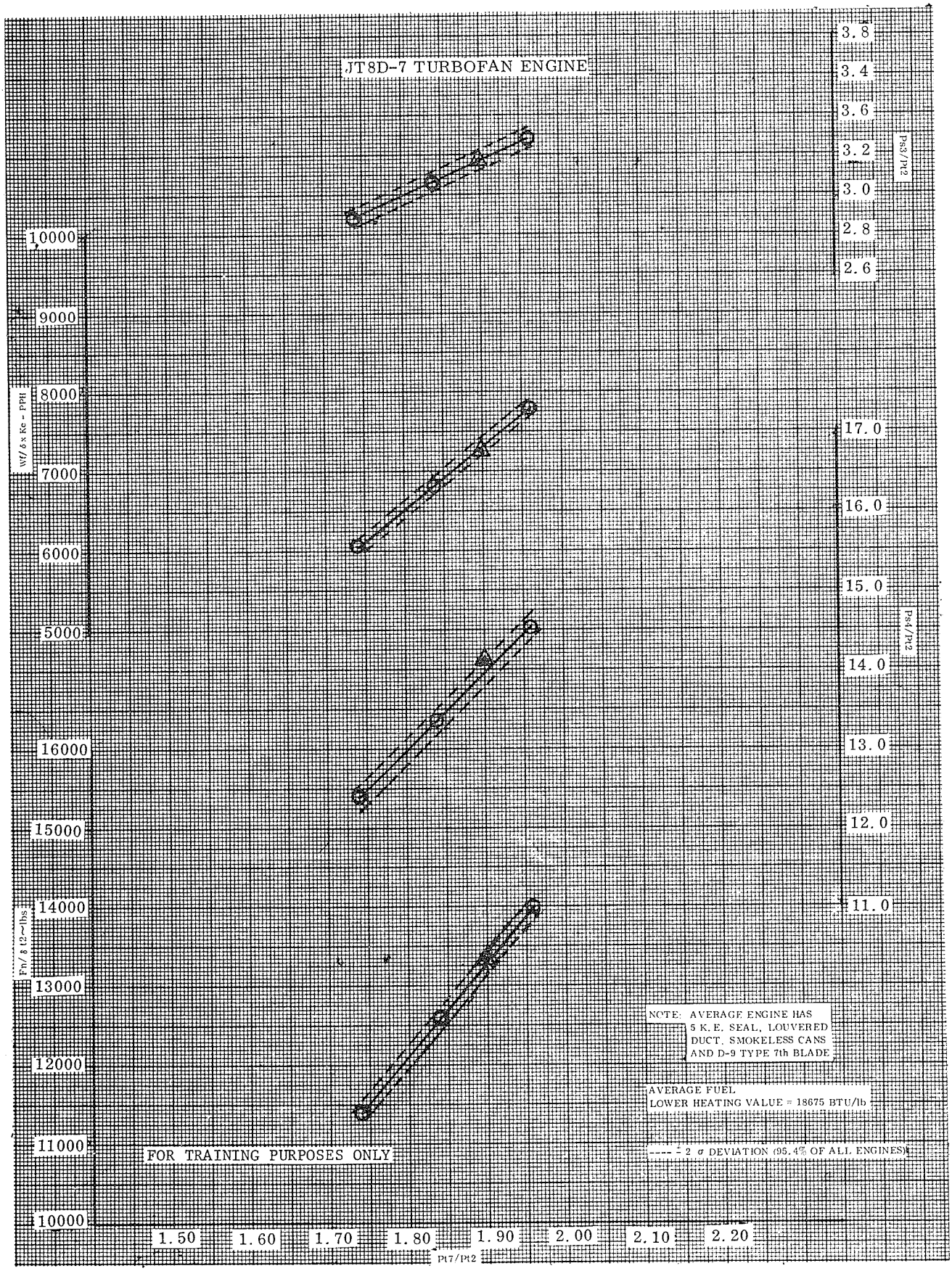
JT8D-7 TURBOFAN ENGINE
Wf/δ x Ke - PPH
10000
9000
8000
7000
6000
5000
Fn/δ t2 - lbs.
16000
15000
14000
13000
12000
11000
10000
Ps3/Pt2
3.8
3.4
3.6
3.2
3.0
2.8
2.6
Ps4/Pt2
17.0
16.0
15.0
14.0
13.0
12.0
11.0
1.50
1.60
1.70
1.80
1.90
2.00
2.10
2.20
Pt7/Pt2
NOTE: AVERAGE ENGINE HAS 5 K.E. SEAL, LOUVERED DUCT, SMOKELESS CANS AND D-9 TYPE 7th BLADE
AVERAGE FUEL
LOWER HEATING VALUE = 18675 BTU/lb
---- ± 2 σ DEVIATION (95.4% OF ALL ENGINES)
FOR TRAINING PURPOSES ONLY

Figure 8-3A

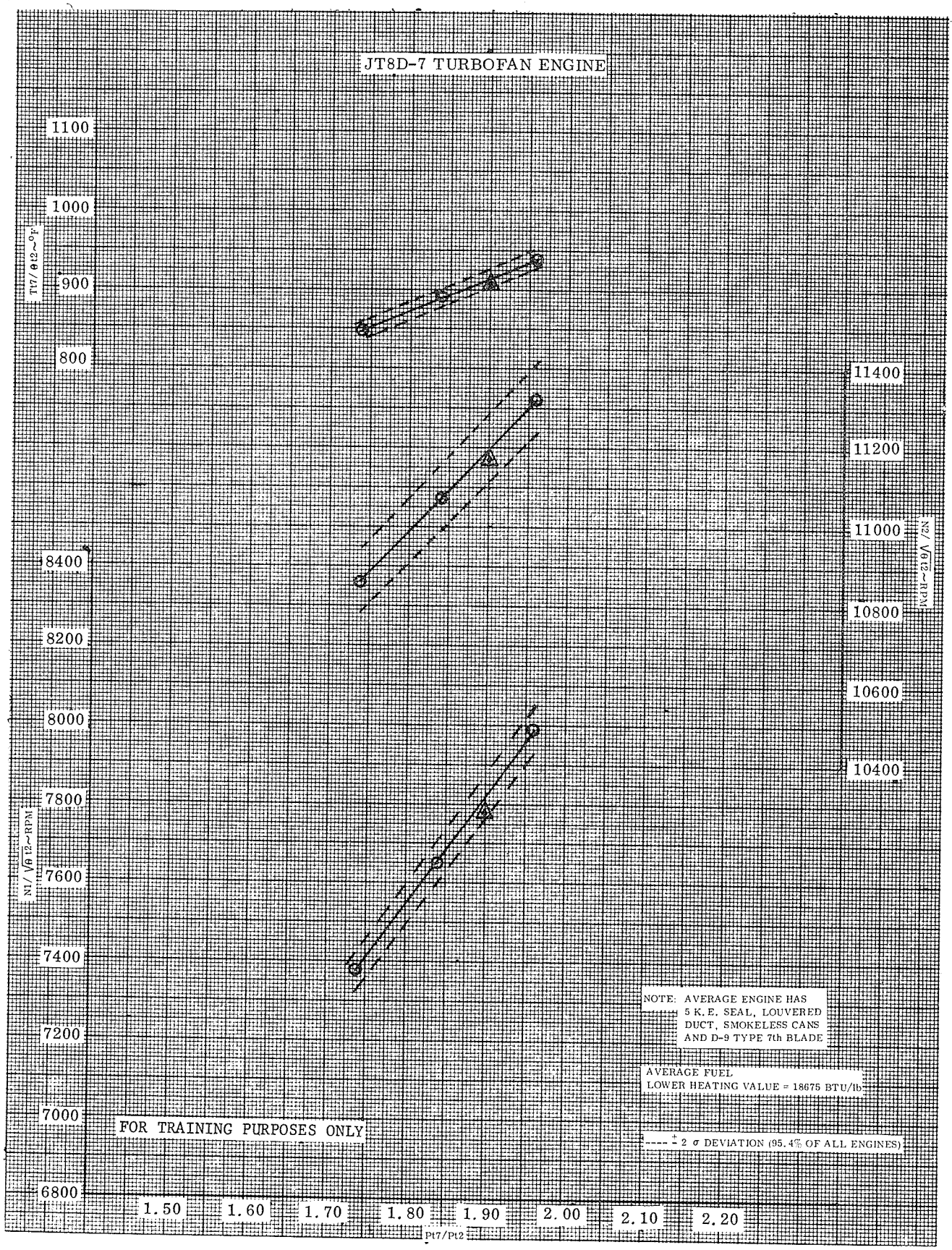
JT8D-7 TURBOFAN ENGINE
1100
1000
900
800
Tt7/θ12~°F
8400
8200
8000
7800
7600
7400
7200
7000
6800
N1/√θ12~RPM
11400
11200
11000
10800
10600
10400
N2/√θ12~RPM
1.50
1.60
1.70
1.80
1.90
2.00
2.10
2.20
Pt7/Pt2
NOTE: AVERAGE ENGINE HAS 5 K.E. SEAL, LOUVERED DUCT, SMOKELESS CANS AND D-9 TYPE 7th BLADE
AVERAGE FUEL
LOWER HEATING VALUE = 18675 BTU/lb
FOR TRAINING PURPOSES ONLY
± 2 σ DEVIATION (95.4% OF ALL ENGINES)

Figure 8-3B

bands in Figures 8-3A and 8-3B, the engine is not exhibiting signs of significant deterioration. If the plotted data falls outside of the bands, it is a sign of possible deterioration. The results of the example in paragraph 8-6 and the plots in Figures 8-3A and 8-3B reveal the operating characteristics of a normal engine.

C. Noting the direction, and magnitude of any deviations of plotted data from the baseline curves can assist in determining the types of deterioration that caused the deviations.

D. As previously stated in Section 7 of this handbook, the gas turbine engine has the ability to repeatedly duplicate its operating parameters on a day-to-day basis as long as its condition remains essentially unchanged.

8-8. DETERMINING TYPE OF DETERIORATION

A. Tables 8-5 and 8-6 are provided as a guide for determining the typical "parameter shifts" that are associated with JT8D gaspath deterioration.

B. Table 8-5 reflects the typical parameter shifts that are associated with JT8D Cold Section problems, while Table 8-6 illustrates the typical shifts attributed to Hot Section problems.

C. The engine Cold Section and Hot Section has been defined in Section 7 of this handbook.

8-9. EXAMPLE PROBLEM

There now follows an example Ground Performance Monitoring Run of a JT8D-9 exhibiting the effects of deterioration. The rationale for analyzing the results begins in paragraph 8-9E.

A. Assume the following observed data:

1) Ambient Pressure = 30.00 "HgA (14.74 PSIA)

2) Ambient Temperature = 75°F (535°R)

3) % N1 RPM = 88.9%

4) % N2 RPM = 90.3%

5) Fuel Flow (P.P.H.) = 7344

6) EGT = 513°C (956°F)

7) Ps4 = 179.0 PSIG

8) EPR = 1.85

B. Determine:

δ am, θ am, $\sqrt{\theta \text{ am}}$, and Kc

The above correction factors can be calculated as in paragraph 8-6B, or extracted directly from Tables 8-1, 8-2, and Figure 8-2.

Utilizing the equations below, compute the corrected parameters, and calculate Ps4/Pt2.

C. Equations and Calculations

1) Indicated N1 RPM = % Indicated N1 X 100% N1 RPM = 89.25% X 8,589 RPM = 7,666 RPM

2) Indicated N2 RPM = % Indicated N2 X 100% N2 RPM = 90.63% X 12,250 RPM = 11,103 RPM

3) Indicated EGT = 513°C
From Table 8-4B, 513°C = 956°F

4) $$\text{Corrected N1 RPM} = \frac{\text{Observed N1 RPM}}{\sqrt{\theta \text{ am}}} = \frac{7{,}636 \text{ RPM}}{1.01} = 7{,}560 \text{ RPM}$$

5) $$\text{Corrected N2 RPM} = \frac{\text{Observed N2 RPM}}{\sqrt{\theta \text{ am}}} = \frac{11{,}060 \text{ RPM}}{1.01} = 10{,}950 \text{ RPM}$$

6) $$\text{Corrected EGT } ^{\circ}\text{F} = \frac{\text{Observed EGT } ^{\circ}\text{F} + 460}{\theta \text{ am}} = \frac{956^{\circ}\text{F} + 460}{1.03} = 1{,}375^{\circ}\text{R}$$

$^{\circ}$F = $^{\circ}$R-460
$^{\circ}$F = 1,375-460
$^{\circ}$F = 915

7) Corrected Fuel Flow (P. P. H.) =

$$\frac{\text{Observed Fuel Flow}}{\delta \text{ am x Kc}} = \frac{7344}{1.002 \times 1.0196} = 7,200$$

8) $$Ps4/Pt2 = \frac{Ps4\ (Psig) + Pam\ (Psia)}{Pt2\ (Psia)} = \frac{179.0 + 14.74}{14.74} = 13.15$$

D. Plot the corrected parameters, and calculated Ps4/Pt2, against the JT8D-9 performance curves in Figures 8-4A and 8-4B and determine the directional deviations from the bands.

E. Note that N1 plots well within the band. This indicates that N1 has not changed significantly. However, N2 plots below the band. This indicates that the speed of the N2 compressor is now low for the observed EPR.

F. Fuel Flow and EGT plotted above the bands suggesting that a greater rate of fuel flow, with resulting higher EGT, is required to produce the observed EPR.

G. Finally, the overall compressor pressure ratio, Ps4/Pt2 is low. This reflects the effect of the low N2 speed on the overall compressor pressure ratio.

H. In summary, the plots of corrected parameters, and calculated Ps4/Pt2 reveal:

EPR	=	Constant
N1	=	No significant change
N2	=	Low
Wf	=	High
EGT	=	High
Ps4/Pt2	=	Low

Referring to the parameter shifts in Table 8-6, the most likely cause of the deviations noted above appears to be high first stage turbine nozzle guide vane area. The high vane area could be the result of "bowing" or the improper selection of vane "classification."

I. In the above example, only nozzle guide vane bowing has been assumed as the existing form of deterioration. It is logical, however, to expect that several forms of deterioration will exist in a given engine. Thus, performance monitoring may not reveal parameter shifts caused by a single discrepancy, but several areas where the operator should direct his attention.

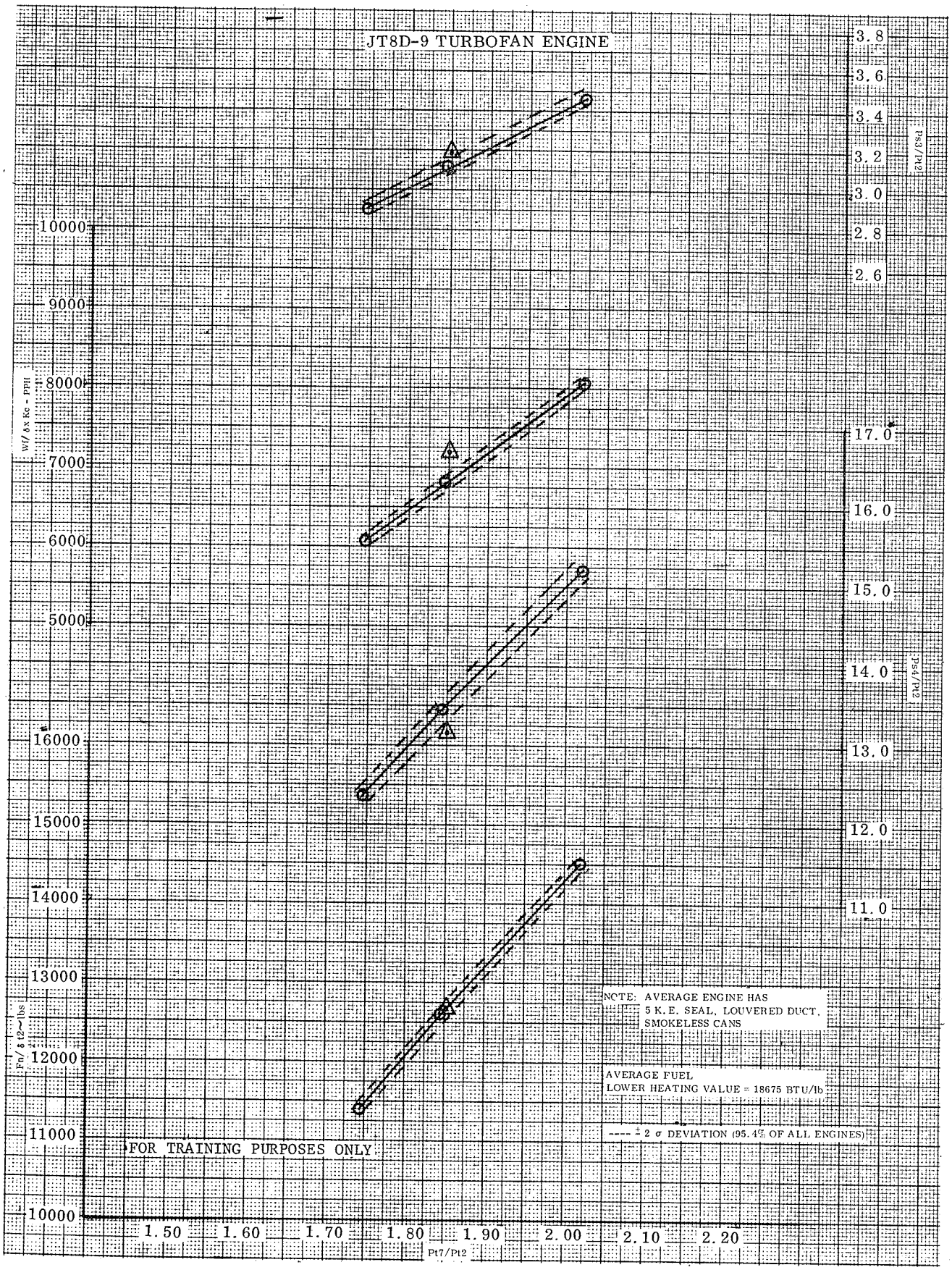
JT8D-9 TURBOFAN ENGINE
3.8
3.6
3.4
3.2
3.0
2.8
2.6
Ps2/Pt2
10000
9000
8000
7000
6000
5000
W/ δx Ks - PPH
17.0
16.0
15.0
14.0
13.0
12.0
11.0
Cp Ps4/Pt2
16000
15000
14000
13000
12000
11000
10000
Fn/ δ t2 ~ lbs
NOTE: AVERAGE ENGINE HAS
5 K.E. SEAL, LOUVERED DUCT,
SMOKELESS CANS
AVERAGE FUEL
LOWER HEATING VALUE = 18675 BTU/lb
---- ± 2 σ DEVIATION (95.4% OF ALL ENGINES)
FOR TRAINING PURPOSES ONLY
1.50
1.60
1.70
1.80
1.90
2.00
2.10
2.20
Pt7/Pt2

Figure 8-4A

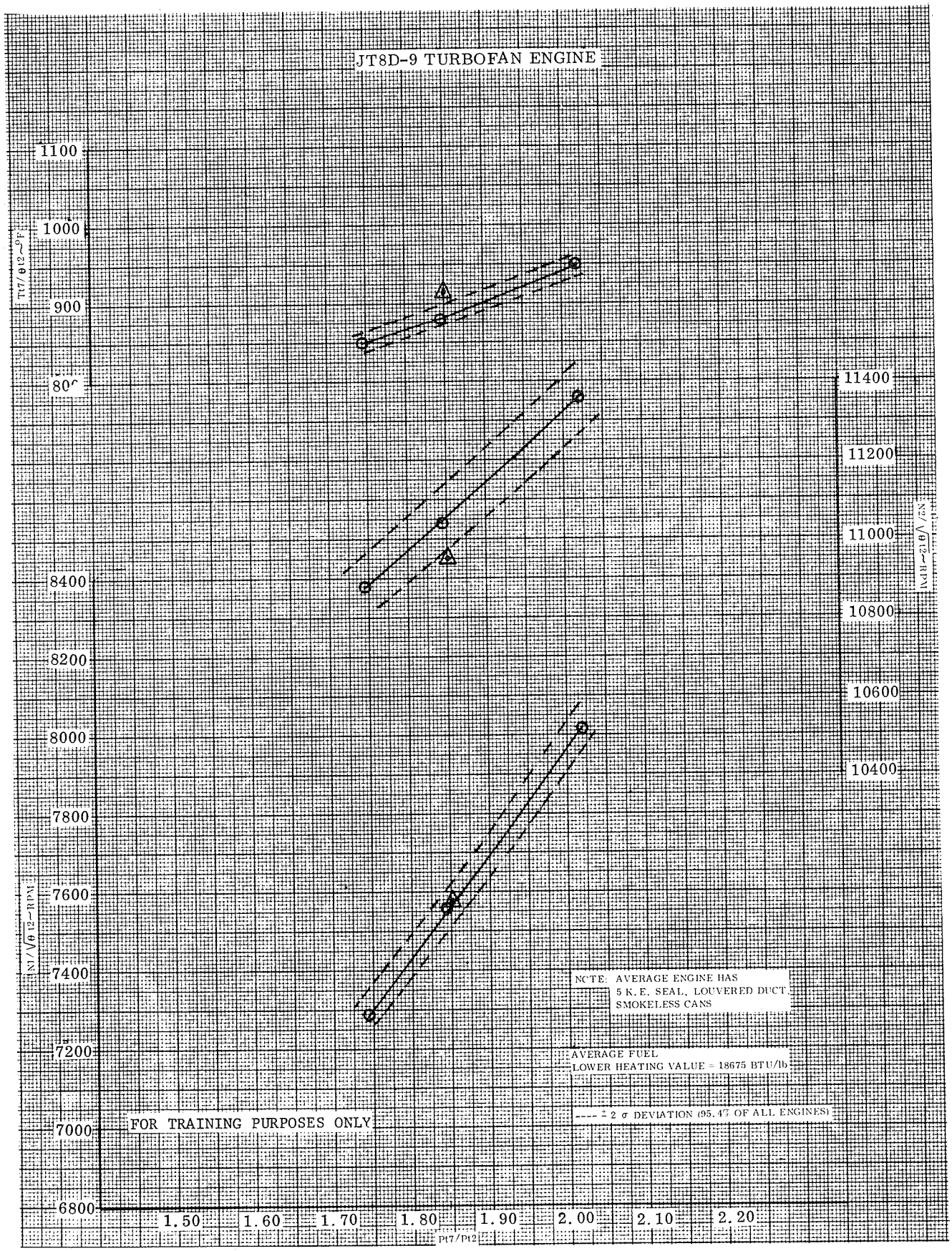
JT8D-9 TURBOFAN ENGINE
Tt7/θt2 ~ °F
1100
1000
900
800
N1/√θt2 ~ RPM
8400
8200
8000
7800
7600
7400
7200
7000
6800
N2/√θt2 ~ RPM
11400
11200
11000
10800
10600
10400
1.50
1.60
1.70
1.80
1.90
2.00
2.10
2.20
Pt7/Pt2
NOTE: AVERAGE ENGINE HAS
5 K.E. SEAL, LOUVERED DUCT,
SMOKELESS CANS
AVERAGE FUEL
LOWER HEATING VALUE = 18675 BTU/lb
---- ± 2 σ DEVIATION (95.4% OF ALL ENGINES)
FOR TRAINING PURPOSES ONLY

Figure 8-4B

8-10. EXPLANATION OF ADDITIONAL INFLUENCES

Columns headed "Additional Influences" appear in Tables 8-5, and 8-6. The most frequently occuring additional influences are: high EGT, off-idle stalls, slow acceleration, and high power stalls. The most common causes of these influences are now discussed separately.

8-11. HIGH EGT

A. The most likely causes for high EGT are:

1) High and low turbine efficiency losses.

2) Bowed or high class 1st and 2nd turbine NGV areas.

3) Compressor flow capacity and/or efficiency losses (check for FOD, contamination, and/or erosion).

4) Bleeds open in normal bleed closed range (check bleed operation as per JT8D Engine Manual or applicable Airframe Manual.

5) Leaks, instrument error or burner section deterioration.

8-12. OFF IDLE STALLS

A. The most likely causes for off-idle stalls are:

1) Anti-surge bleeds closed in the normal bleed open range (check bleed operation as per JT8D Engine Manual or applicable Airframe Manual).

2) Low class or effectively small 1st turbine NGVs.

3) Loss in high compressor surge line (check for FOD, contamination, erosion or excessive blending).

4) Fuel Control "rich" acceleration schedule.

5) P&D valve not correctly adjusted (replace with calibrated unit) S.B. 3813.

6) Unusual transient operation "bodie" stalls.

8-13. SLOW ACCELERATION

A. The most likely causes for slow acceleration are:

1) Bowed or high class 1st turbine NGVs (check class and condition of 1st turbine NGVs).

2) Fuel Control acceleration schedule lean shift or internal hang up (Ps4 line to FCU for obstructions or leaks).

3) Loss in turbine section efficiency.

4) Anti-surge bleed hang up (check bleed operation as per JT8D Engine Manual or applicable Airframe Manual).

8-14. HIGH POWER STALL

A. The most likely causes for high power stalls are:

1) Decreased high turbine efficiency due to increased outer air seal clearance and erosion.

2) Low class or effectively small 2nd NGVs and/or bowed or high class 1st turbine NGVs.

3) Loss in low compressor surge line (check for FOD, contamination and/or erosion).

4) Installation and inlet effects can also lead to stalls.

PARAMETER SHIFT TABLE

Component Source	Directional Deviation from Base Line Curve						Additional Influences	Sugg. Action
	N1	N2	Wf	EGT	Ps3/Pt2	Ps4/Pt2		
1% loss in fan efficiency	↑	↑	↑	↑			Slow acceleration	Waterwash
1% loss if LPC efficiency	↓	↑	↑	↑	↓		Slow acceleration, high power stall	Waterwash
6th stage air leak into fan	→	↑	↑	↑	↓	↓	Slow acceleration	Inspect for leaks, cracks, etc.
6th stage duct leak overboard (1%)	↑	↑	↑	↑	↓	→	Slow acceleration	Inspect for leaks, cracks, etc.
8th stage air leak into fan	↓	↓	↑	↑	↓	↓	Slow acceleration	Inspect for leaks, cracks, etc.
8th stage duct leak overboard (1%)	↑	↑	↑	↑	↓	→	Slow acceleration	Inspect for leaks, cracks, etc.
13th stage air leak into fan	↓	↑	↑	↑	↓	↓	Slow acceleration	Inspect for leaks, cracks, etc.
13th stage duct leak overboard (1%)	↑	↑	↑	↑	↓	↓	Slow acceleration	Inspect for leaks, cracks, etc.
1% loss in HPC efficiency	↑	↑	↑	↑	↑	→	Off-idle stall, slow acceleration, high power stall	
Anti-surge bleeds closed at idle PLA 1 bleed	↓	↑	↑	↑			Throttle stagger	S.B. 2806
2 bleeds	↓	↑	↑	↑				
Anti-surge bleed open 1 valve	↑	↑	↑	↓			Off idle stall	S.B. 2806
2 valves	↑	↑	↑	↓				

TABLE 8-5

PARAMETER SHIFT TABLE

Component Source	Directional Deviation from Base Line Curve						Additional Influences	Sugg. Action
	N1	N2	Wf	EGT	Ps3/Pt2	Ps4/Pt2		
Burner can shift			↑	↑	→	↑	Hard starting - Wandering idle - Off-idle stall - Slow acceleration - Wandering at high power	S.B. 2531
1st NGV area (2 classes oversize)	→	↓	↑	↑	↑	↓	Slow acceleration - High power stall - Deceleration stall	Remove and install proper class vanes
1% loss in HPT efficiency	↓	↓	↑	↑	↑	↓	Slow acceleration, high power stall	S.B. 2627
2nd NGV area (2 classes oversize)	↓	↑	↑	↑	↓	↑	Off-idle stall, slow acceleration	S.B. 2627
1% loss in LPT efficiency	↓	↑	↑	↑	↓	↓	Slow acceleration	S.B. 2629 & 2997
Jet nozzle area 1% oversize	↑	↑	↑	↑	↑	↑	Slow acceleration, high power stall	
1st NGV area (2 classes undersize)	→	↑	↓	↓	↓	↑	Off-idle stall	All operator LTR. GEK: 2-5-30-1-88
2nd NGV area (2 classes undersize)	↑	↓	↓	↓	↑	↓	High power stall	S.B. 2627

TABLE 8-6

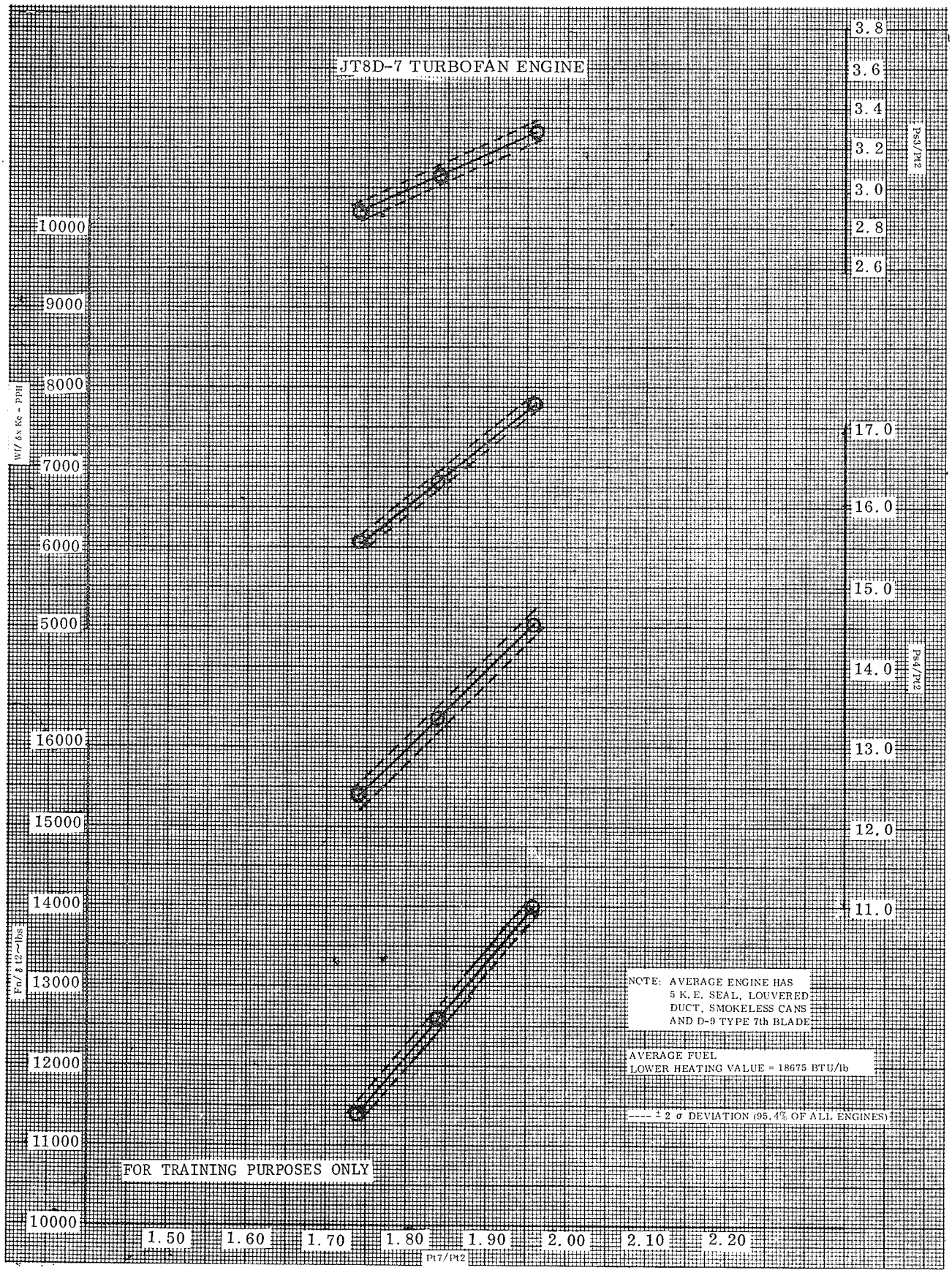

Ground Performance Monitoring

Figure 8-5A

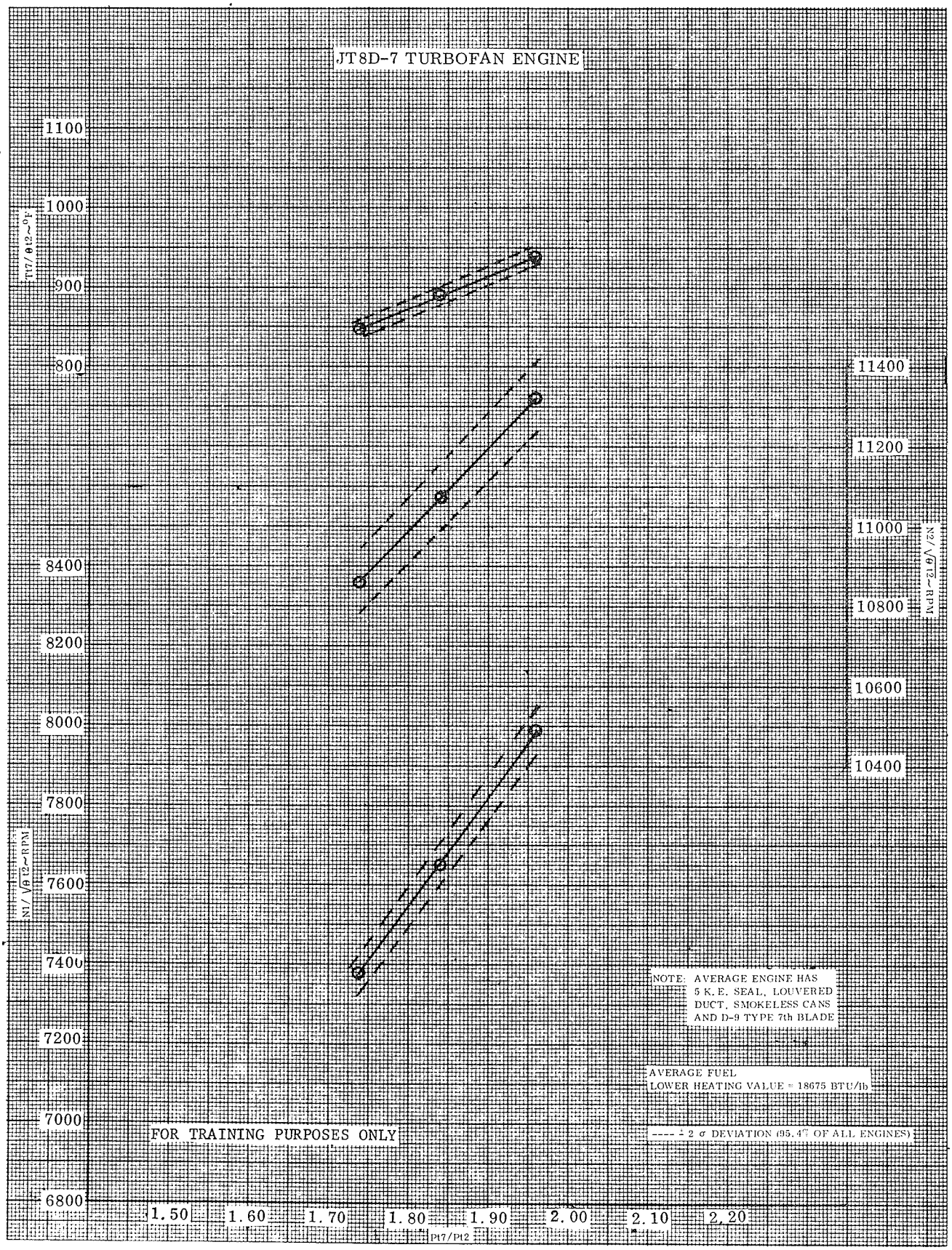
JT8D-7 TURBOFAN ENGINE
T17/θ12 ~ °F
1100
1000
900
800
N1/√θ12 ~ RPM
8400
8200
8000
7800
7600
7400
7200
7000
6800
N2/√θ12 ~ RPM
11400
11200
11000
10800
10600
10400
1.50
1.60
1.70
1.80
1.90
2.00
2.10
2.20
P17/P12
NOTE: AVERAGE ENGINE HAS 5 K.E. SEAL, LOUVERED DUCT, SMOKELESS CANS AND D-9 TYPE 7th BLADE
AVERAGE FUEL
LOWER HEATING VALUE = 18675 BTU/lb
---- ± 2 σ DEVIATION (95.4% OF ALL ENGINES)
FOR TRAINING PURPOSES ONLY

Figure 8-5B

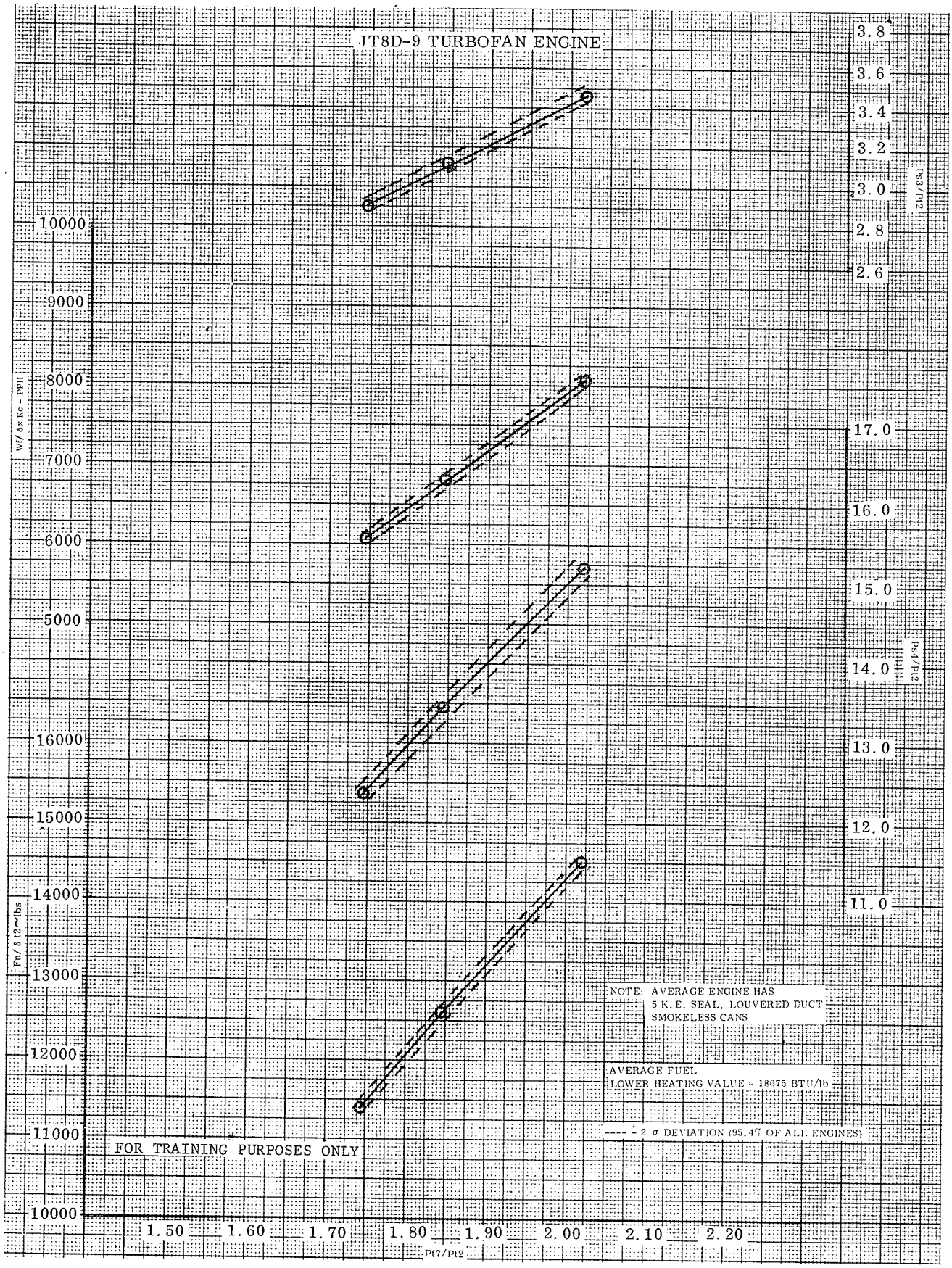
JT8D-9 TURBOFAN ENGINE
Wf/ δx θ - PPH
10000
9000
8000
7000
6000
5000
Fn/ δ θ2 ~ lbs
16000
15000
14000
13000
12000
11000
10000
1.50
1.60
1.70
1.80
1.90
2.00
2.10
2.20
Pt7/Pt2
3.8
3.6
3.4
3.2
3.0
2.8
2.6
Ps3/Pt2
17.0
16.0
15.0
14.0
13.0
12.0
11.0
Ps4/Pt2
NOTE: AVERAGE ENGINE HAS
5 K.E. SEAL, LOUVERED DUCT
SMOKELESS CANS
AVERAGE FUEL
LOWER HEATING VALUE = 18675 BTU/lb
---- ± 2 σ DEVIATION (95.4% OF ALL ENGINES)
FOR TRAINING PURPOSES ONLY

Figure 8-6A

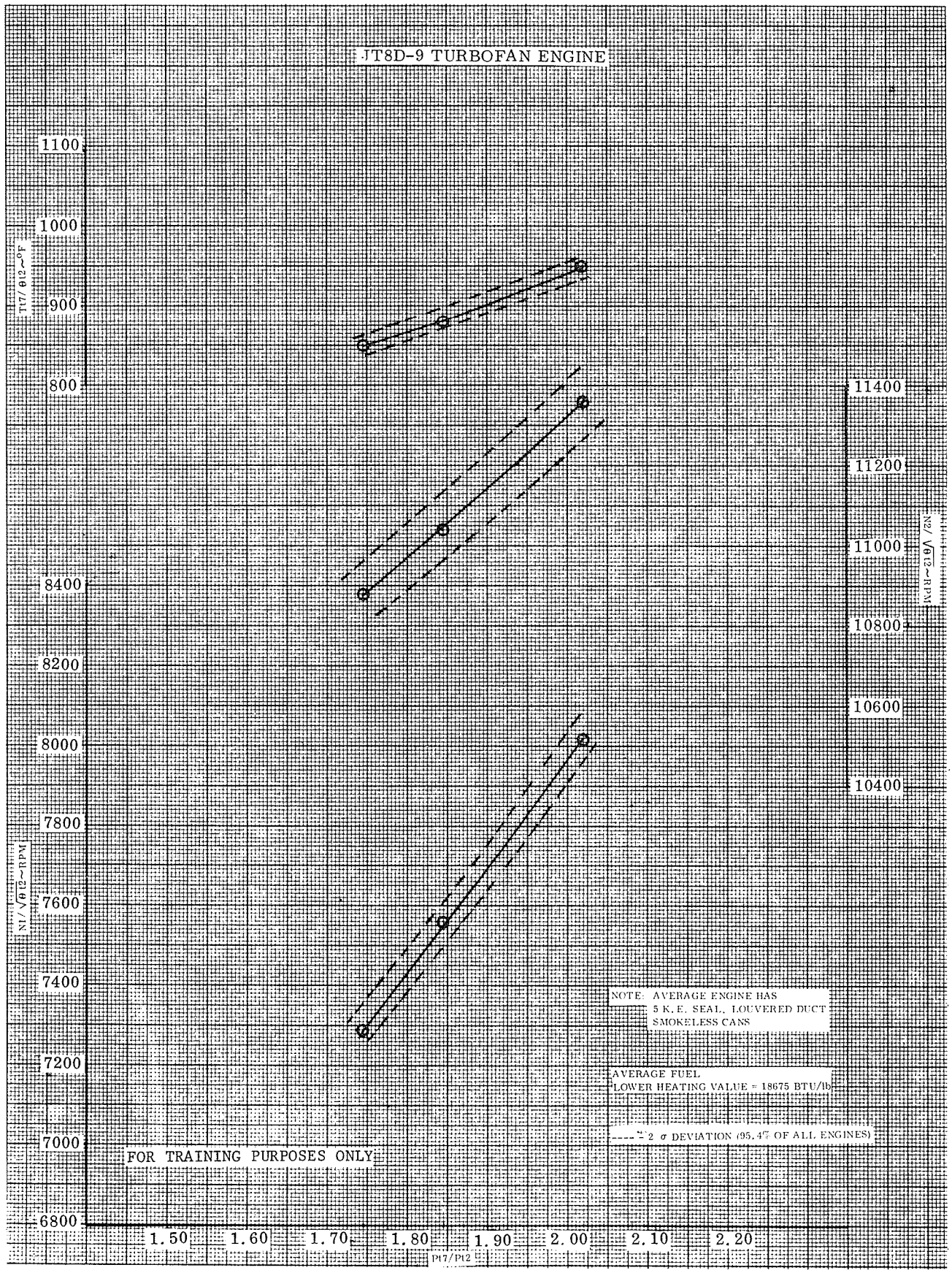
JT8D-9 TURBOFAN ENGINE
T17/θ12~°F
1100
1000
900
800
N1/√θ12~RPM
8400
8200
8000
7800
7600
7400
7200
7000
6800
N2/√θ12~RPM
11400
11200
11000
10800
10600
10400
1.50
1.60
1.70
1.80
1.90
2.00
2.10
2.20
P17/P12
NOTE: AVERAGE ENGINE HAS
5 K.E. SEAL, LOUVERED DUCT
SMOKELESS CANS
AVERAGE FUEL
LOWER HEATING VALUE = 18675 BTU/lb
± 2 σ DEVIATION (95.4% OF ALL ENGINES)
FOR TRAINING PURPOSES ONLY

Figure 8-6B

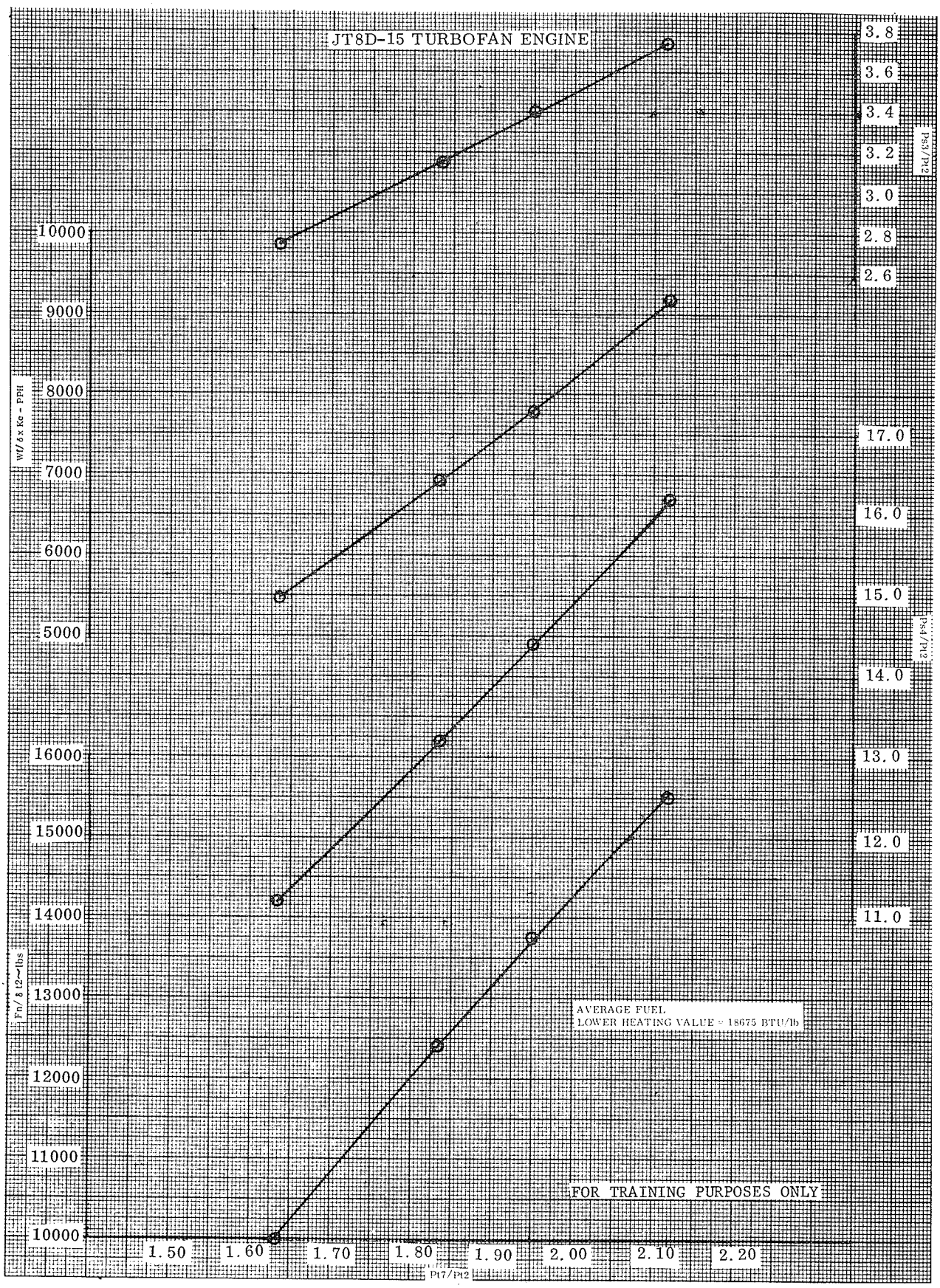
JT8D-15 TURBOFAN ENGINE
Wf/δx θc - PPH
10000
9000
8000
7000
6000
5000
Fn/δ12~lbs
16000
15000
14000
13000
12000
11000
10000
Ps3/Pt2
3.8
3.6
3.4
3.2
3.0
2.8
2.6
Ps4/Pt2
17.0
16.0
15.0
14.0
13.0
12.0
11.0
AVERAGE FUEL
LOWER HEATING VALUE = 18675 BTU/lb
FOR TRAINING PURPOSES ONLY
1.50
1.60
1.70
1.80
1.90
2.00
2.10
2.20
Pt7/Pt2

Figure 8-7A

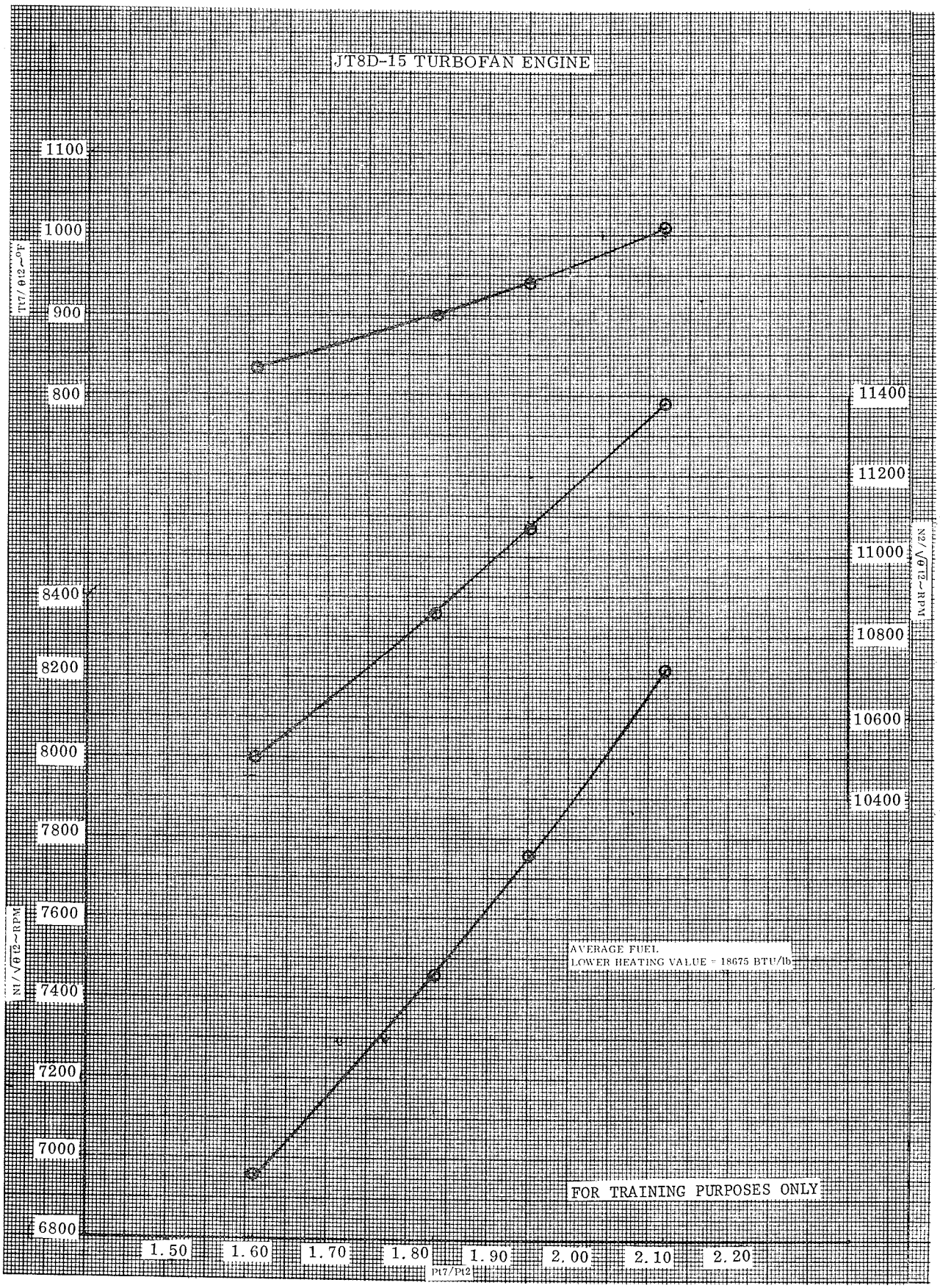
JT8D-15 TURBOFAN ENGINE
1100
1000
900
800
8400
8200
8000
7800
7600
7400
7200
7000
6800
N1/√θt2~RPM
Tt7/θt2~°F
11400
11200
11000
10800
10600
10400
N2/√θt2~RPM
AVERAGE FUEL
LOWER HEATING VALUE = 18675 BTU/lb
FOR TRAINING PURPOSES ONLY
1.50
1.60
1.70
1.80
1.90
2.00
2.10
2.20
Pt7/Pt2

Figure 8-7B